WARNING
POWER LINES OVERHEAD

811 Know what's below. Call before you dig.

# CAMROSA WATER DISTRICT

CAMROSA WATER DISTRICT
BUILDING WATER SELF-RELIANCE

# 1,2,3-TCP REMOVAL PROJECT FOR CONEJO WELLS

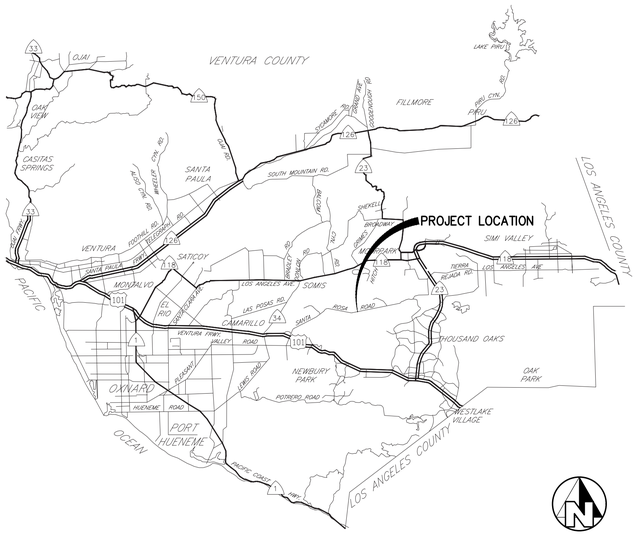


VICINITY MAP
NOT TO SCALE

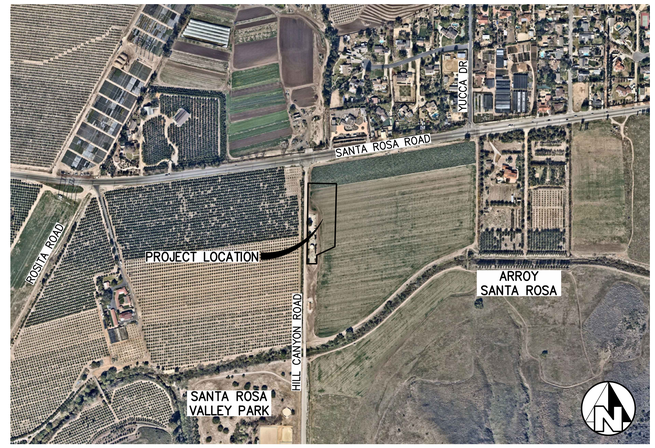


PROJECTION LOCATION MAP
NOT TO SCALE

| SHEET INDEX | | |
|---|---|---|
| SHEET NO. | SEQ. SHEET NO. | DESCRIPTION |
| GENERAL | | |
| G-1 | 1 | COVER SHEET |
| G-2 | 2 | LEGEND & ABBREVIATIONS |
| G-3 | 3 | GENERAL NOTES |
| G-4 | 4 | GENERAL NOTES |
| G-5 | 5 | DESIGN CRITERIA |
| G-6 | 6 | PROCESS FLOW DIAGRAM |
| G-7 | 7 | GAC OPERATIONAL FLOW DIAGRAM |
| G-8 | 8 | TREATMENT HYDRAULIC PROFILE |
| G-9 | 9 | BACKWASH HYDRAULIC PROFILE |
| CIVIL | | |
| C-1 | 10 | HORIZONTAL AND VERTICAL CONTROL PLAN |
| C-2 | 11 | DEMOLITION PLAN |
| C-3 | 12 | SITE PLAN |
| C-4 | 13 | GRADING PLAN |
| C-5 | 14 | PIPING PLAN-NORTH |
| C-6 | 15 | PIPING PLAN-SOUTH |
| C-7 | 16 | SITE COORDINATES |
| DETAILS | | |
| D-1 | 17 | GAC DETAILS |
| D-2 | 18 | GAC DETAILS |
| D-3 | 19 | GAC DETAILS |
| D-4 | 20 | MISC DETAILS |
| D-5 | 21 | MISC DETAILS |
| D-6 | 22 | MISC DETAILS |
| D-7 | 23 | FENCE DETAILS |
| D-8 | 24 | SANTA ROSA WELL 8 DETAILS |
| D-9 | 25 | ANALYZER BUILDING DETAILS |
| D-10 | 26 | DUAL M3 SKID |
| D-11 | 27 | CHEMICAL ENCLOSURE DETAILS |
| D-12 | 28 | BACKWASH TANK DETAILS |
| D-13 | 29 | TREATED WATER TANK DETAILS |
| D-14 | 30 | TANK DETAILS |
| D-15 | 31 | TANK DETAILS |
| D-16 | 32 | BACKWASH REINTEGRATION PUMP DETAILS |
| D-17 | 33 | CARBON DIOXIDE SYSTEM DETAILS |
| D-18 | 34 | DISTRICT STANDARD DETAILS |

| SHEET INDEX | | |
|---|---|---|
| SHEET NO. | SEQ. SHEET NO. | DESCRIPTION |
| D-19 | 35 | DISTRICT STANDARD DETAILS |
| D-20 | 36 | ANALYZER BUILDING STRUCTURAL DETAILS |
| D-21 | 37 | STRUCTURAL DETAILS |
| D-22 | 38 | STRUCTURAL DETAILS |
| D-23 | 39 | STRUCTURAL DETAILS |
| ELECTRICAL | | |
| E0.1 | 40 | ELECL LEGEND, ABBR, GENERAL NOTES AND (E) ELEC SITE – ELEC DEMO PLAN |
| E1.0 | 41 | OVERALL ELECTRICAL SITE PLAN |
| E1.1 | 42 | PARTIAL SITE PLAN (NW CORNER) AREAS NEW ELECTRICAL WORK |
| E1.2 | 43 | NEW INTEGRATED POWER CENTER CHEM AREA EQUIP & ENCLOSURE(S) |
| E1.3 | 44 | (N) GAC TREATMENT AREA ELECTRICAL PLAN |
| E1.4 | 45 | PARTIAL SITE PLAN (SW CORNER) AREAS NEW ELECTRICAL WORK |
| E1.5 | 46 | NEW WATER TREATMENT STORAGE TANK & (E) BOOSTER PUMP(S) RECONNECT |
| E2.1 | 47 | NEW SERVICE – MAIN SWITCHBOARD MSB DIAGRAM AND ELEVATION DET |
| E2.2 | 48 | MOTOR CONTROL CENTER – MCC2 SINGLE LINE DIAGRAM & ELEVATION DET |
| E2.3 | 49 | MOTOR CONTROL CENTER – MCC3 SINGLE LINE DIAGRAM & ELEVATION DET |
| E2.4 | 50 | MOTOR CONTROL CENTER – MCC4 SINGLE LINE DIAGRAM & ELEVATION DET |
| E3.1 | 51 | SCHEDULES |
| E3.2 | 52 | PANEL SCHEDULES |
| E4.0 | 53 | ELECTRICAL DETAILS |
| E4.1 | 54 | ELECTRICAL DETAILS |

REGISTERED PROFESSIONAL ENGINEER
R. KEVIN BERRYHILL
No. 70415
CIVIL
STATE OF CALIFORNIA

DATE SIGNED: 10/12/2021

REVIEWED: _____ DATE
OPERATIONS SUPERVISOR

| NO. | DESCRIPTION | PRE. BY | APP. BY | DATE BY |
|---|---|---|---|---|
| 00 | ON. | | | |

EST. 1968
PROVOST& PRITCHARD
CONSULTING GROUP
An Employee Owned Company

455 W FIR AVENUE
CLOVIS, CALIFORNIA 93611
559/449-2700
FAX 559/449-2715
www.ppeng.com

PREPARED BY: _____
R.C.E. NO. EXP. DATE

DESIGN JB
DRAWN RKB
CHECK
DATE

CAMROSA WATER DISTRICT
BUILDING WATER SELF-RELIANCE

CAMROSA WATER DISTRICT
REVIEWED: _____ DATE
DISTRICT ENGINEER
ACCEPTED: _____ DATE
GENERAL MANAGER

COVER SHEET
1,2,3-TCP REMOVAL PROJECT FOR CONEJO WELLS
CAMROSA WATER DISTRICT
CAMARILLO, CA

SHEET NO. 1 OF 54

DRAWING NO. G-1

10/12/2021 9:56 AM G:\camrosa water district\2959\2958\20002-camrosa gac design project\300 CAD\340 sheet sets\01_General\G-1 COVER SHEET.dwg Jordan Noel

## ABBREVIATIONS

| | |
|---|---|
| AB | AGGREGATE BASE |
| AC | ASPHALT CONCRETE |
| AD | ALUMINUM DISK |
| AGG | AGGREGATE |
| AH | AHEAD |
| ALT | ALTERNATE |
| AP | ANGLE POINT |
| APPROX | APPROXIMATE |
| APN | ASSESSOR'S PARCEL NUMBER |
| ARV | AIR RELIEF VALVE |
| ASTM | AMERICAN SOCIETY FOR TESTING AND MATERIALS |
| AV | AIR VENT |
| AVE | AVENUE |
| AWWA | AMERICAN WATER WORKS ASSOCIATION |
| BC | BEGIN CURVE |
| BD | BRASS DISK |
| BFP | BACKFLOW PREVENTOR |
| BFV | BLOCK FLOW VALVE |
| BK | BACK |
| BLDG | BUILDING |
| BLF | WELL BLOWOFF |
| BM | BENCHMARK |
| BO | BOLLARD |
| BR | BACKWASH RETURN |
| BTM | BOTTOM |
| BVC | BEGIN VERTICAL CURVATURE |
| BW | BACKWASH |
| BW | BACK OF WALK |
| BWL | BACK OF WALL |
| C, CONC | CONCRETE |
| CA | CALIFORNIA |
| CAB | CABINET |
| CB | CATCH BASIN |
| CBL | CABLE |
| CFS | CUBIC FEET PER SECOND |
| CHK | CHECK |
| CHLK | CHAIN LINK |
| CI | CAST IRON |
| CIP | CAST IRON PIPE |
| CIPCP | CAST-IN-PLACE CONCRETE PIPE |
| CL | CLASS |
| ℄ | CENTERLINE |
| CLF | CHAIN LINK FENCE |
| CLR | CLEAR, CLEARANCE |
| CMLC | CEMENT MORTAR LINED & COATED |
| CMP | CORRUGATED METAL PIPE |
| CN | CONCRETE NAIL |
| CNS | COMPACTED NATIVE SOIL |
| CO | SEWER CLEAN OUT |
| CONT | CONTINUOUS |
| CONST | CONSTRUCT/CONSTRUCTION |
| COR | CORNER |
| CORP | CORPORATION |
| COUP | COUPLING |
| CP | CONTROL POINT |
| CR | CROWN |
| CU | CUBIC |
| CWD | CAMROSA WATER DISTRICT |
| CY | CUBIC YARDS |
| DA | DRIVE APPROACH |
| DEMO | DEMOLISH/DEMOLITION |
| DI | DROP INLET |
| DIA, ø | DIAMETER |
| DIM | DIMENSION |
| DIP | DUCTILE IRON PIPE |
| D/S | DOWNSTREAM |
| DW | DRIVEWAY |
| DWG | DRAWING |
| (E) | EXISTING |
| EA | EACH |
| EC | END CURVE |
| ECC | ECCENTRIC |
| EF | EACH FACE |
| EFF | EFFLUENT |
| EG | EXISTING GRADE |
| EL, ELEV | ELEVATION |
| ELC | EPOXY LINED & COATED |
| ELEC | ELECTRIC |
| ELL | ELBOW |
| EM | ELECTRIC METER |
| EOL | END OF LINE |
| EP | EDGE OF PAVEMENT |
| EPB | ELECTRIC PULL BOX |
| EQUIV | EQUIVALENT |
| ESMT | EASEMENT |
| EVC | END VERTICAL CURVE |
| EW | EACH WAY |
| EXP | EXPOSED |
| (F) | FUTURE |
| F&I | FURNISH & INSTALL |
| FD | FOUND |
| FDC | FIRE DEPARTMENT CONNECTION |
| FF | FINISHED FLOOR |
| FG | FINISHED GRADE |
| FH | FIRE HYDRANT |
| FL, FL | FLOW LINE |
| FLG | FLANGE |
| FLGD | FLANGED |
| FM | FORCE MAIN |
| FNC | FENCE |
| FRP | FIBER REINFORCED POLYESTER PIPE |
| FS | FINISH SURFACE |
| FT | FOOT/FEET |
| FW | FRONT OF WALK |
| FWL | FACE OF WALL |
| GA | GAGE/GAUGE |
| GAC | GRANULAR ACTIVATED CARBON |
| GAL | GALLON |
| GALV | GALVANIZED |
| GB | GRADE BREAK |
| GM | GAS METER |
| GPM | GALLONS PER MINUTE |
| GRVL | GRAVEL |
| GS | GAS |
| GSV | GAS VALVE |
| GUY | GUY WIRE |
| GV | GATE VALVE |
| HB | HOSE BIBB |
| HD | HEAD |
| HDPE | HIGH DENSITY POLYETHYLENE |
| HDR | HEADER |
| HDW | HEADWALL |
| HGL | HYDRAULIC GRADE LINE |
| HORIZ | HORIZONTAL |
| HP | HINGE POINT, HIGH POINT, HORSEPOWER |
| HP GAS | HIGH PRESSURE GAS |
| HPS | HIGH PRESSURE SWITCH |
| HR | HANDRAIL |
| HWL | HIGH WATER LEVEL |
| HYDRO | HYDROPNEUMATIC |
| ID | INSIDE DIAMETER |
| IN | INCH |
| INF | INFLUENT |
| INV | INVERT |
| IP | IRON PIPE |
| IRR | IRRIGATION |
| JP | JUNCTION POLE |
| LBS | POUNDS |
| LC | LENGTH OF CURVE |
| LCW | LONG CRESTED WEIR |
| LF | LINEAR FEET |
| LG | LONG |
| LT | LEFT |
| MAX | MAXIMUM |
| MB | MAILBOX |
| MCC | MOTOR CONTROL CENTER |
| MFR | MANUFACTURER |
| MH | MANHOLE |
| MIN | MINIMUM |
| MISC | MISCELLANEOUS |
| MJ | MECHANICAL JOINT |
| MN | MAG NAIL |
| MP | MEDIUM PRESSURE GAS LINE |
| MPT | MALE PIPE THREAD |
| MRKR | MARKER |
| MS | MILD STEEL |
| (N) | NORTH |
| NAVD | NORTH AMERICAN VERTICAL DATUM |
| NC | NORMALLY CLOSED |
| NG | NATURAL GROUND |
| NGVD | NATIONAL GEODETIC VERTICAL DATUM |
| NIC | NOT IN CONTRACT |
| NO | NORMALLY OPEN |
| NPT | NATIONAL PIPE THREAD |
| NPW | NON POTABLE WATER |
| NTS | NOT TO SCALE |
| OC | ON CENTER |
| OD | OUTSIDE DIAMETER |
| OH | OVERHEAD |
| OP | OPERATING |
| OPP | OPPOSITE |
| ORP | OXIDATION REDUCTION POTENTIAL |
| OSHA | OCCUPATIONAL SAFETY & HEALTH ADMINISTRATION |
| O&M | OPERATIONS & MAINTENANCE |
| P | PAVEMENT |
| (P) | PROPOSED |
| PB | PULL BOX |
| PC | POINT OF CURVATURE |
| PCC | PORTLAND CEMENT CONCRETE |
| PE | POLYETHYLENE TUBING |
| PI | POINT OF INTERSECTION |
| PIP | PLASTIC IRRIGATION PIPE |
| PLC | PROGRAMMABLE LOGIC CONTROLLER |
| PL | PROPERTY LINE |
| PNL | PANEL |
| POC | POINT ON CURVE |
| POL | POINT ON LINE |
| POT | POINT ON TANGENT |
| PP | POWER POLE |
| PRV | PRESSURE REDUCING VALVE |
| PSF | POUNDS PER SQUARE FOOT |
| PSI | POUNDS PER SQUARE INCH |
| PT | POINT OF TANGENCY |
| PVC | POLYVINYL CHLORIDE |
| PVC-G | PVC-GRAVITY |
| PVMT | PAVEMENT |
| PVI | POINT OF VERTICAL INTERSECTION |
| R | RADIUS |
| RBR | REBAR |
| RC | RADIUS OF CURVE |
| RCL | RECLAIM |
| RCP | REINFORCED CONCRETE PIPE |
| RD | RELATIVE DENSITY, ROAD |
| RE | REFERENCE |
| REQD | REQUIRED |
| RET | RETURN |
| REV | REVISION |
| RGRCP | RUBBER GASKETED REINFORCED CONCRETE PIPE |
| RGS | RIGID GALVANIZED STEEL |
| RP | RADIUS POINT |
| RR | RAILROAD |
| RT | RIGHT |
| RTU | REMOTE TERMINAL UNIT |
| RW | RAW WATER |
| R/W | RIGHT OF WAY |
| (S) | SOUTH, SOLVENT WELD |
| S | SLIP |
| S= | SLOPE |
| SCH | SCHEDULE |
| SCP | STANDARD CONCRETE PIPE |
| SD | STORM DRAIN |
| SDMH | STORM DRAIN MANHOLE |
| SEC | SECTION |
| SERV | SERVICE |
| SF | SQUARE FEET |
| SP | SERVICE POLE |
| SPEC | SPECIFICATION |
| SPNDL | SPINDLE |
| SQ | SQUARE |
| SS | SANITARY SEWER |
| SS OR STS | STAINLESS STEEL |
| STA | STATION |
| STD | STANDARD |
| STL | STEEL |
| STP | STANDPIPE |
| SWL | SWALE |
| STWL | STILLING WELL |
| (T) | THREADED |
| T | THREAD |
| T&B | TOP & BOTTOM |
| TB | TOP OF BANK |
| TBM | TEMPORARY BENCHMARK |
| TC | TOP OF CURB |
| TCE | TEMPORARY CONSTRUCTION EASEMENT |
| TDI | TENSILE DUCTILE IRON |
| TELE | TELEPHONE |
| TF | TOP OF FOOTING |
| TFC | TOP FACE OF CURB |
| TG | TOP OF GRATE |
| TH | THREAD |
| TL | TOP OF LINING |
| TOE | TOE OF SLOPE |
| TOP | TOP OF SLOPE |
| TP | TOP OF PIPE VALVE |
| TP | TELEPHONE POLE |
| TR | TELEPHONE RISER |
| TRANS | TRANSFORMER |
| TRFC | TRAFFIC |
| TS | TOP OF STRUCTURE |
| TSB | TELEPHONE SPLICE BOX |
| TTW | TREATMENT TO WASTE |
| TYP | TYPICAL |
| TWL | TOP OF WALL |
| UG | UNDERGROUND |
| UNO | UNLESS NOTED OTHERWISE |
| UP | UTILITY POLE |
| U/S | UPSTREAM |
| UT | UTILITY |
| UW | UNDERGROUND WATER |
| VB | VALVE BOX |
| VERT | VERTICAL |
| VG | VALLEY GUTTER |
| VLT | VAULT |
| VLV | VALVE |
| W | WATER |
| WH | WHARF HEAD HYDRANT |
| WL | WATER LINE |
| WM | WATER METER |
| WS | WATER SERVICE |
| WSP | WELDED STEEL PIPE |
| WV | WATER VALVE |
| WW | WASTE WATER |
| W/ | WITH |
| W/O | WITHOUT |

## LINETYPES

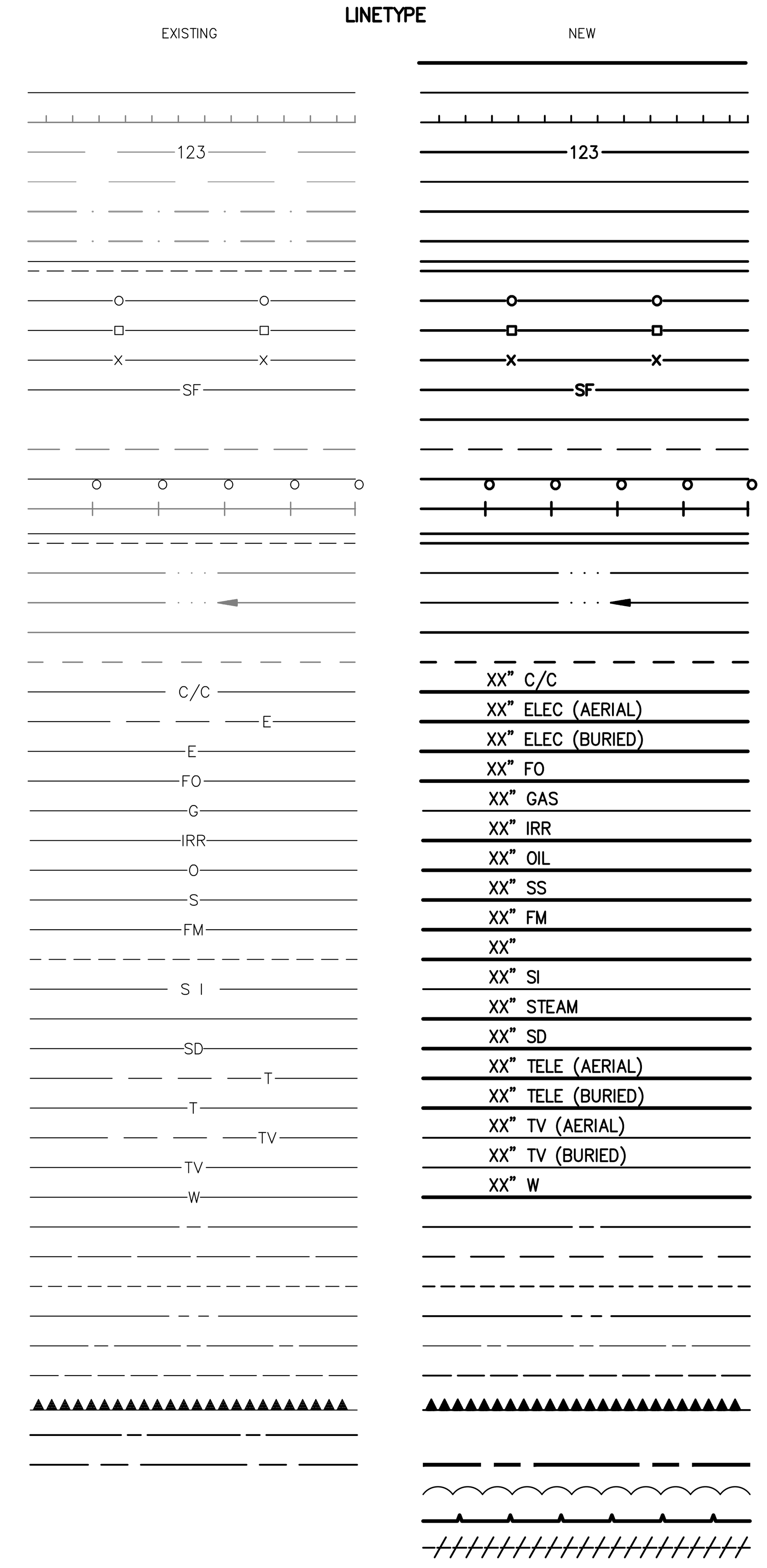


**DESCRIPTION**

WATER LEVEL
BARRICADE
CONTOUR (DEPRESSION)
CONTOUR (MAJOR)
CONTOUR (MINOR)
EMBANKMENT TOE
EMBANKMENT TOP
FENCE (BLOCK WALL)
FENCE (CHAIN LINK)
FENCE (WOOD)
FENCE (WIRE)
FENCE (SILT)
GATE SWING
GRADE BREAK
GUARDRAIL
RAILROAD
RETAINING WALL
SWALE CENTERLINE
SWALE W/FLOW ARROWS
WATER (LAKE/POND)
WATER (MARSH/SWAMP)
COMPUTER/COMM. (BURIED)
ELECTRIC (AERIAL)
ELECTRIC (BURIED)
FIBER-OPTIC
GAS
IRRIGATION
OIL
SANITARY SEWER
SANITARY SEWER FORCE MAIN
SANITARY SEWER LATERAL
SIGNAL INTERCONNECT (BURIED)
STEAM
STORM DRAINAGE
TELEPHONE (AERIAL)
TELEPHONE (BURIED)
TELEVISION (AERIAL LINE)
TELEVISION (BURIED LINE)
WATER
CENTERLINE
EASEMENT
MEANDER LINE
PROPERTY LINE
RESERVATION/PARK/FOREST
RIGHT-OF-WAY
RELINQUISH ACCESS LINE
SECTION LINE
STATE/COUNTY/CORPORATE LIMIT
REVISION CLOUD
SAWCUT LINE
DEMO LINE
WORK LIMITS

## HATCHES

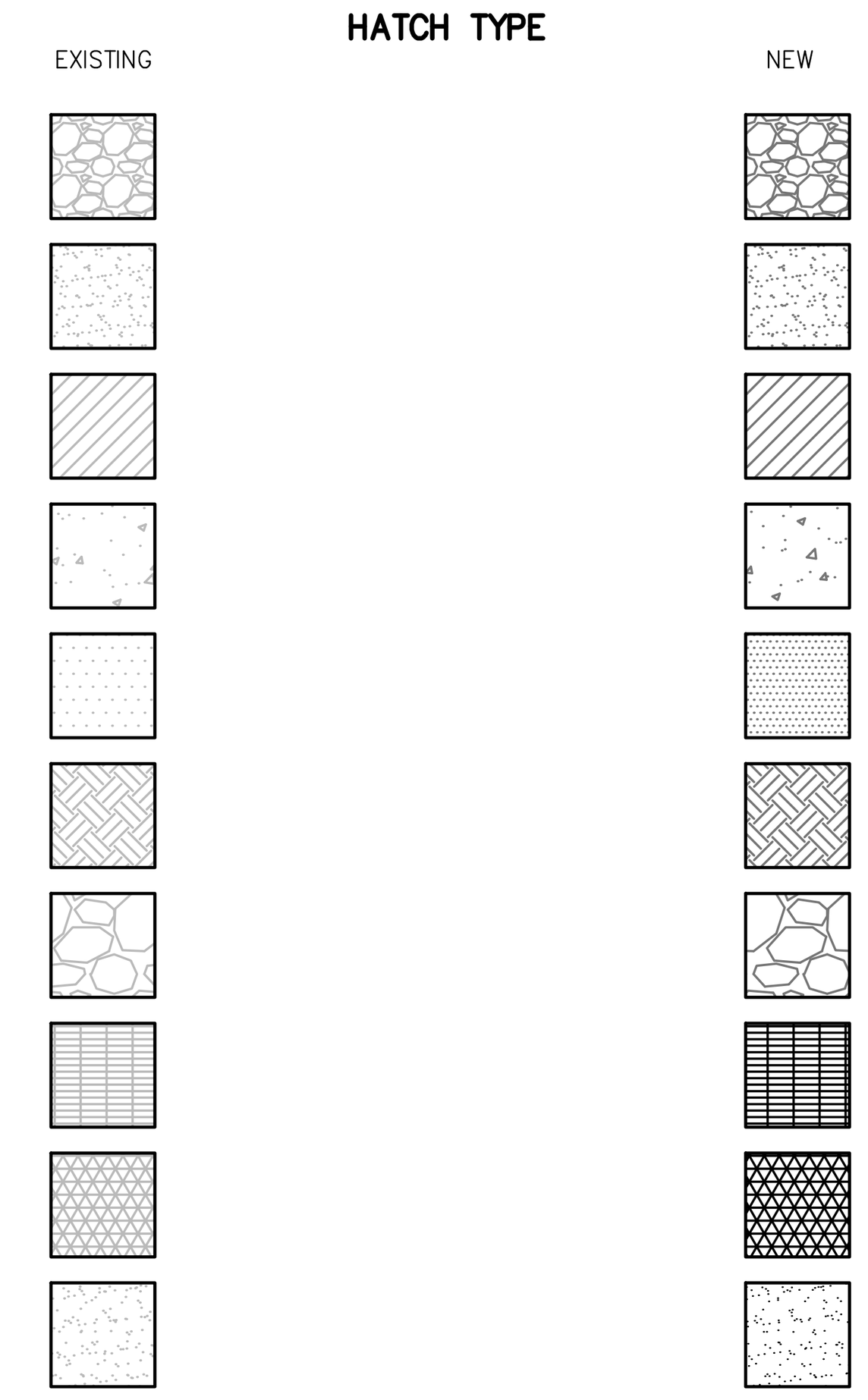


**DESCRIPTION**

AGGREGATE BASE
AGGREGATE BASE (PLAN VIEW)
AC PAVING
CONCRETE
CONCRETE (PLAN VIEW)
EARTH
RIP RAP
GRATING
EXPANDED METAL
SAND

## SYMBOLS

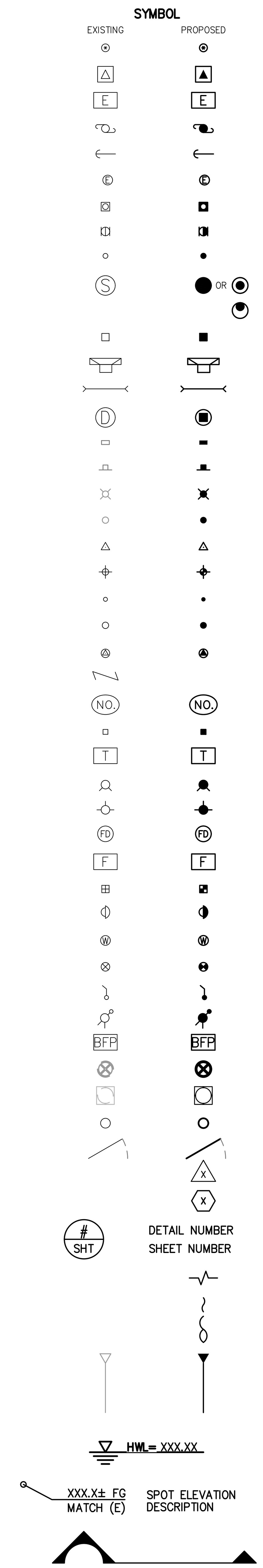


**DESCRIPTION**

ELECTRIC METER
PAD MOUNTED TRANSFORMER
ELECTRIC VAULT
UTILITY POLE
UTILITY POLE ANCHOR
ELECTRIC MANHOLE
GAS METER
GAS VALVE
SAN. SEWER CLEAN OUT
SAN. SEWER MANHOLE
SSMH (ECCENTRIC CONE)
STORM DRAIN CATCH BASIN
STORM DRAIN INLET
STORM DRAIN CULVERT
STORM DRAIN MANHOLE
MAIL BOX
SIGN
YARD LIGHT
GUARD POST
CONTROL POINT
BENCH MARK
IRON PIPE
BLOCK CORNER MONUMENT
(SURFACE)
OWNERSHIP TIE
LOT NUMBER
TELEPHONE RISER
TELEPHONE VAULT
2-NOZZLE HYDRANT
3-NOZZLE HYDRANT
FIRE DEPT. CONNECTION
FIRE VAULT
WATER METER
CANAL GATE
WELL
WATER VALVE
BLOW-OFF
AIR RELIEF VALVE
BACK FLOW PREVENTOR
GATE VALVE HANDLE
STILLING WELL
FENCE POST
FENCE GATE
REVISION
CONSTRUCTION CALLOUT
DETAIL CALLOUT
LINE BREAK
PIPE END (SCHEMATIC)
PIPE END
EMBANKMENT ARROW
HIGH WATER LINE
SPOT ELEVATION
SECTION VIEW

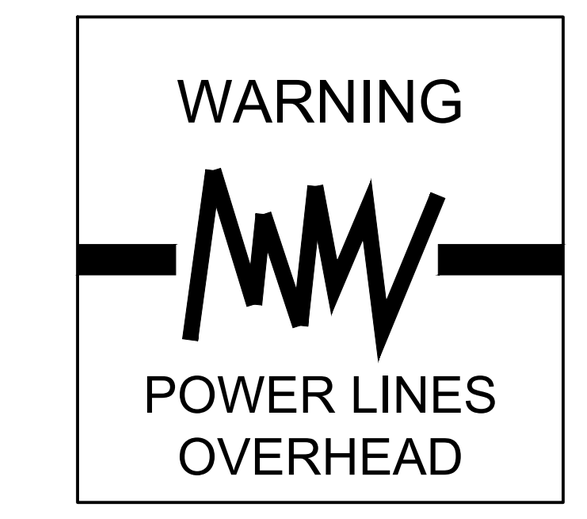


Know what's below. Call before you dig.

## PIPE FITTINGS

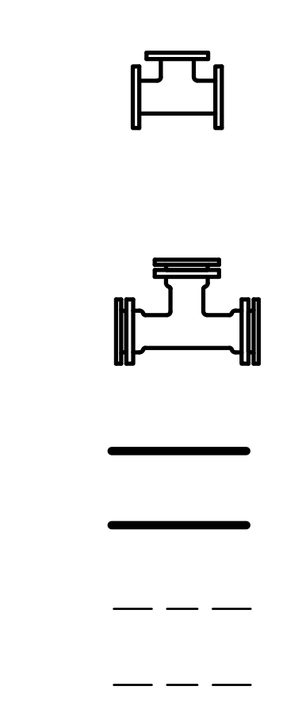

FLANGED JOINT
MECHANICAL JOINT
ABOVE GRADE PIPE
BELOW GRADE PIPE

COPYRIGHT 2021 by PROVOST & PRITCHARD ENGINEERING GROUP, INC. ALL RIGHTS RESERVED
The firm of Provost & Pritchard Engineering Group, Inc. expressly reserves its common law copyright and other applicable property rights in these plans. These plans are not to be reproduced, changed, or copied in any form or manner whatsoever, nor are they to be assigned to a third party without first obtaining the written permission and consent of Provost & Pritchard Engineering Group, Inc. In the event of unauthorized reuse of these plans by a third party, the third party shall hold the firm of Provost & Pritchard Engineering Group, Inc. harmless, and shall bear the cost of Provost & Pritchard Engineering Group, Inc.'s legal fees associated with defending and enforcing these rights.

| No. | REVISION | BY | DATE |
|---|---|---|---|
| | BID ISSUE 10-12-2021 | | |

REGISTERED PROFESSIONAL ENGINEER R. KEVIN BERRYHILL No. 70415 CIVIL STATE OF CALIFORNIA

DATE SIGNED: 10/12/2021

1,2,3-TCP REMOVAL PROJECT FOR
CONEJO WELLS
CAMROSA WATER DISTRICT
CAMARILLO, CA

GENERAL

LEGEND & ABBREVIATIONS

EST. 1968
PROVOST & PRITCHARD
CONSULTING GROUP
An Employee Owned Company
455 W FIR AVENUE
CLOVIS, CALIFORNIA 93611
559/449-2700 FAX 559/449-2715
https://provostandpritchard.com/

DESIGN ENGINEER: KEVIN BERRYHILL
LICENSE NO: 70415

DRAFTED BY: JB
CHECKED BY: RKB

DATE: 10/11/2021
JOB NO: 295820002
PROJECT NO: 295820002
PHASE:

0 1"
ORIGINAL SCALE SHOWN IS ONE INCH. ADJUST SCALE FOR REDUCED OR ENLARGED PLANS.

SHEET G-2



10/12/2021 9:37 AM g:\camrosa water district-2958\295820002-camrosa gac design project\300 CAD\340 sheet sets\01_General\G-2 LEGEND & ABBREVIATIONS.dwg -Jordan Noel

## GENERAL

1. BEFORE COMMENCING EXCAVATION THE CONTRACTOR SHALL NOTIFY ALL UTILITY AUTHORITIES OR UTILITY COMPANIES HAVING INTEREST IN THE WORK OF THE CONTRACTOR'S INTENTION TO EXCAVATE, PROXIMITY TO EXISTING FACILITIES, AND THE CONTRACTOR SHALL REQUEST OWNER TO VERIFY THE LOCATION, DEPTH, AND SIZE OF ALL UTILITIES IN THE WORK AREA. THE WORK SHALL NOT BE COMMENCED UNTIL THE CONTRACTOR HAS FIRST BEEN PROVIDED AN INQUIRY IDENTIFICATION NUMBER FOR SUB-SURFACE INSTALLATIONS AS SPECIFIED IN SECTION 4216 OF THE GOVERNMENT CODE.

2. CONTRACTOR SHALL NOTIFY AND COORDINATE ALL RELATED WORK WITH THE FOLLOWING AGENCIES:
   1. CAMROSA WATER DISTRICT /COUNTY OF VENTURA
   2. CALLEGUAS MUNICIPAL WATER DISTRICT SOUTHERN CALIFORNIA GAS
   3. AT&T
   4. SOCAL EDISON
   5. ANY OTHER AGENCY GRANTING AN EASEMENT OR ADJACENT UTILITY PURVEYOR

3. ALL WATER DISTRIBUTION MAINS INCLUDING MAIN TO COUNTY PARK, SERVICE TO CHEMICAL SYSTEM EYEWASH AND SHOWER, AND CALLEGUAS BLENDING STATION SHALL REMAIN IN SERVICE EXCEPT FOR OUTAGES SPECIFICALLY APPROVED BY THE OWNER. ALL POWERED EQUIPMENT INCLUDING PUMPS AND CONTROLS MAY BE OUT OF SERVICE FOR UP TO FOUR MONTHS TO ALLOW FOR CONSTRUCTION OF ELECTRICAL UPGRADES.

4. THE CONTRACTOR SHALL PROVIDE RECORD DRAWINGS FOR ALL PROJECT IMPROVEMENTS.

5. DETAILS AND NOTES ON TYPICAL SHEETS SHALL APPLY UNLESS SPECIFICALLY SHOWN OTHERWISE. DETAILS OF CONSTRUCTION NOT FULLY SHOWN SHALL BE OF THE SAME NATURE AS SHOWN FOR SIMILAR CONDITIONS.

6. SHOP DRAWINGS FOR THIS CONTRACT SHALL BE COORDINATED WITH FAVORABLY REVIEWED EQUIPMENT MANUFACTURER'S DRAWINGS.

7. DIMENSIONS NOTED WITH AN ASTERISK "*" ARE TO BE COORDINATED WITH FAVORABLY REVIEWED EQUIPMENT MANUFACTURER'S DRAWINGS.

8. ALL DIMENSIONS ARE TO BE FIELD VERIFIED BY THE CONTRACTOR PRIOR TO COMMENCING WORK OR FABRICATION. IF ANY CONDITION EXISTS THAT IS NOT AS SHOWN ON THE DRAWINGS THE ENGINEER SHALL BE NOTIFIED IMMEDIATELY.

9. DO NOT SCALE DRAWINGS. WRITTEN DIMENSIONS SHALL HAVE PRECEDENCE OVER SCALED DRAWINGS.

10. ALL WORK SHALL BE PERFORMED BY LICENSED CONTRACTOR(S) USING MATERIALS AND METHODS IN ACCORDANCE WITH APPLICABLE SECTIONS OF THE 2019 CALIFORNIA BUILDING CODE (CBC), LOCAL CODES AND ORDINANCES. REPORT ALL DISCREPANCIES TO THE ENGINEER IMMEDIATELY.

11. ANY CHANGES TO THE APPROVED SET OF PLANS WITHOUT NOTIFYING THE ENGINEER PRIOR TO SUCH CHANGES ABSOLVES SAID ENGINEER FROM ANY AND ALL RESPONSIBILITY WITH RESPECT TO THE LIABILITY, DAMAGE OR EXTRA WORK RESULTING FROM SAID CHANGES.

12. ALL WORK SHALL CONFORM TO THE LATEST APPLICABLE CONSTRUCTION SAFETY REQUIREMENTS OF OSHA AND ANY OTHER GOVERNMENTAL ENTITY HAVING JURISDICTION.

13. ANY SUPPORT SERVICES PERFORMED BY THE ENGINEER OR FIELD REPRESENTATIVES DURING CONSTRUCTION SHALL BE DISTINGUISHED FROM CONTINUOUS AND DETAILED INSPECTION SERVICES WHICH ARE FURNISHED BY OTHERS. THESE SUPPORT SERVICES PERFORMED BY THE ENGINEER WHETHER PERFORMED PRIOR TO, DURING, OR AFTER COMPLETION OF CONSTRUCTION ARE PERFORMED SOLELY FOR THE PURPOSE OF ASSISTING IN QUALITY CONTROL AND IN ACHIEVING CONFORMANCE WITH CONTRACT DRAWINGS AND SPECIFICATIONS, BUT THEY DO NOT GUARANTEE CONTRACTOR'S PERFORMANCE AND SHALL NOT BE CONSTRUED AS SUPERVISION OF CONSTRUCTION.

14. ALL EQUIPMENT AND MATERIALS IN CONTACT WITH THE RAW WELL AND TREATED WATER SHALL BE CERTIFIED TO NSF/ANSI STANDARD 61 FOR DRINKING WATER SYSTEM COMPONENTS – HEALTH EFFECTS.

15. THE CONTRACTOR IS RESPONSIBLE FOR FURNISHING, AND THE PROJECT BID PRICE SHALL INCLUDE, A FULL LOAD OF CARBON DIOXIDE AND SODIUM HYDROXIDE AT THE BEGINNING OF SYSTEM STARTUP.

16. THE FOLLOWING ITEMS ARE OWNER-FURNISHED (FOB PROJECT SITE), CONTRACTOR INSTALLED AND INTEGRATED:
    A) GAC VESSEL PAIRS
    B) ACTIVATED CARBON MEDIA
    C) CARBON DIOXIDE STORAGE AND FEED SYSTEM
    D) STANDBY ENGINE GENERATOR WITH FUEL SYSTEM
    E) MAIN ELECTRICAL SWITCH GEAR AND MCCS

## SITE SAFETY AND PROTECTION NOTES

THE DUTY OF THE ENGINEER, OWNER OR ITS AGENTS TO CONDUCT CONSTRUCTION REVIEW OF THE CONTRACTOR'S PERFORMANCE AND THE UNDERTAKING OF INSPECTIONS OR THE GIVING OF INSTRUCTIONS AS AUTHORIZED HEREIN IS NOT INTENDED TO INCLUDE REVIEW OF THE ADEQUACY OF THE CONTRACTOR'S SAFETY MEASURES IN, ON, OR NEAR THE CONSTRUCTION SITE AND SHALL NOT BE CONSTRUED AS SUPERVISION OF THE ACTUAL CONSTRUCTION NOR MAKE THE ENGINEER, OWNER OR ITS AGENTS RESPONSIBLE FOR PROVIDING A SAFE PLACE FOR THE PERFORMANCE OF WORK BY THE CONTRACTOR, SUBCONTRACTORS, OR SUPPLIERS, OR FOR ACCESS, VISITS, USE, WORK, TRAVEL OR OCCUPANCY BY ANY PERSON.

THE CONTRACTOR SHALL HAVE AT THE WORK SITE, COPIES OR SUITABLE EXTRACTS OF CONSTRUCTION SAFETY ORDERS, ISSUED BY CAL-OSHA. CONTRACTOR SHALL COMPLY WITH PROVISIONS OF THESE AND ALL OTHER APPLICABLE LAWS, ORDINANCES AND REGULATIONS. THE CONTRACTOR MUST COMPLY WITH PROVISIONS OF THE SAFETY AND HEALTH REGULATIONS FOR CONSTRUCTION, PROMULGATED BY THE SECRETARY OF LABOR UNDER SECTION 107 OF THE CONTRACT WORK HOURS AND SAFETY STANDARDS ACT, AS SET FORTH IN TITLE 29 C.F.R.

TO PROTECT THE LIVES AND HEALTH OF CONTRACTOR'S EMPLOYEES UNDER THE CONTRACT, THE CONTRACTOR SHALL COMPLY WITH ALL PERTINENT PROVISIONS OF THE "MANUAL OF ACCIDENT PREVENTION IN CONSTRUCTION" ISSUED BY THE ASSOCIATED GENERAL CONTRACTORS OF AMERICA, INC., AND SHALL MAINTAIN AN ACCURATE RECORD OF ALL CASES OF DEATH, OCCUPATIONAL DISEASE, AND INJURY REQUIRING MEDICAL ATTENTION OR CAUSING LOSS OF TIME FROM WORK, ARISING OUT OF AND IN THE COURSE OF EMPLOYMENT OR WORK UNDER THE CONTRACT.

THE CONTRACTOR ALONE SHALL BE RESPONSIBLE FOR THE SAFETY, EFFICIENCY, AND ADEQUACY OF CONTRACTOR'S FACILITIES, APPLIANCES, AND METHODS AND FOR ANY DAMAGE, WHICH MAY RESULT FROM THEIR FAILURE OR THEIR IMPROPER CONSTRUCTION, MAINTENANCE OR OPERATION.

THE CONTRACTOR AGREES THAT IT SHALL ASSUME SOLE AND COMPLETE RESPONSIBILITY FOR JOB SITE CONDITIONS DURING THE COURSE OF CONSTRUCTION OF THIS PROJECT, INCLUDING SAFETY OF ALL PERSONS AND PROPERTY; THAT THIS REQUIREMENT SHALL APPLY CONTINUOUSLY AND NOT BE LIMITED TO NORMAL WORKING HOURS; AND THAT THE CONTRACTOR SHALL DEFEND, INDEMNIFY AND HOLD THE OWNER, PROVOST & PRITCHARD CONSULTING GROUP, AND THEIR RESPECTIVE AGENTS HARMLESS FROM ANY AND ALL LIABILITY, REAL OR ALLEGED, IN CONNECTION WITH THE PERFORMANCE OF WORK ON THIS PROJECT, EXCEPTING FOR LIABILITY ARISING FROM THE SOLE NEGLIGENCE OF OWNER, ENGINEER, OR THEIR RESPECTIVE AGENTS.

THE OWNER AND ITS AGENTS' SITE RESPONSIBILITIES ARE LIMITED SOLELY TO THE ACTIVITIES OF THEIR EMPLOYEES ON SITE. THESE RESPONSIBILITIES SHALL NOT BE INFERRED BY ANY PARTY TO MEAN THAT THE OWNER OR ITS AGENTS HAVE RESPONSIBILITY FOR SITE SAFETY. SAFETY IN, ON, OR ABOUT THE SITE IS THE SOLE AND EXCLUSIVE RESPONSIBILITY OF THE CONTRACTOR ALONE. THE CONTRACTOR'S METHODS OF WORK PERFORMANCE, SUPERINTENDENCE AND THE CONTRACTOR'S EMPLOYEES, AND SEQUENCING OF CONSTRUCTION ARE ALSO THE SOLE AND EXCLUSIVE RESPONSIBILITIES OF THE CONTRACTOR ALONE.

## SPECIAL NOTE

WHERE UNDERGROUND AND SURFACE STRUCTURES ARE SHOWN ON THE PLANS, THE LOCATIONS, DEPTH AND DIMENSIONS OF STRUCTURES ARE BELIEVED TO BE REASONABLY CORRECT, BUT ARE NOT GUARANTEED. SUCH STRUCTURES ARE SHOWN FOR THE INFORMATION OF THE CONTRACTOR, BUT INFORMATION SO GIVEN IS NOT TO BE CONSTRUED AS A REPRESENTATION THAT SUCH STRUCTURES WILL, IN ALL CASES, BE FOUND WHERE SHOWN, OR THAT THEY REPRESENT ALL OF THE STRUCTURES WHICH MAY BE ENCOUNTERED.

## DEMOLITION

1. ALL EXISTING CONCRETE AND AC PAVEMENT IMPROVEMENTS SHOWN TO BE REMOVED SHALL BE SAW CUT A MINIMUM DEPTH OF 2 INCHES PRIOR TO REMOVAL.

2. UNLESS NOTED OTHERWISE ON THE PLANS, ALL DEMOLISHED MATERIALS AND DEBRIS SHALL BE DISPOSED OF BY THE CONTRACTOR.

## CONCRETE NOTES

1. ALL CONCRETE SHALL BE NORMAL WEIGHT CONSISTING OF TYPE II/V PORTLAND CEMENT, FINE AGGREGATE, COARSE AGGREGATE, AND WATER (WATER:CEMENT RATIO SHALL NOT EXCEED 0.45 ABSOLUTE BY WEIGHT, AND SLUMP SHALL NOT EXCEED 4 INCHES ±1 INCH). THE CONCRETE SHALL BE PLACED WITHIN ONE AND ONE-HALF HOURS FROM THE TIME WATER IS INTRODUCED. TO YIELD AT 28 DAYS A MINIMUM COMPRESSIVE STRENGTH AS FOLLOWS:

| | |
|---|---|
| PAVING AND SIDEWALKS | 3,000 PSI |
| STRUCTURAL SLABS AND FOOTINGS | 4,000 PSI |
| ALL OTHER STRUCTURAL CONCRETE | 4,000 PSI |

2. CONCRETE CONSTRUCTION SHALL CONFORM TO ACI 318 (LATEST EDITION).

3. CONCRETE MIXING SHALL COMPLY WITH ASTM C94.

4. SUBMIT CONCRETE LIFT DRAWINGS SHOWING THE LOCATION OF CONSTRUCTION JOINTS AND OTHER TYPES OF JOINTS OTHER THAN SPECIFIED OR SHOWN ON THE DRAWINGS FOR FAVORABLE REVIEW BY THE ENGINEER BEFORE START OF WORK ON FORMS, REINFORCING STEEL OR PLACING CONCRETE. ANY ADDITIONAL VERTICAL OR HORIZONTAL CONSTRUCTION JOINTS SHALL HAVE A STANDARD KEYWAY AND SHALL BE REVIEWED BY THE ENGINEER. REFER TO SPECIFICATIONS AND TYPICAL DETAILS FOR ADDITIONAL INFORMATION. CONSTRUCTION JOINTS SHALL BE ROUGHENED TO 1/4" AMPLITUDE.

5. OPENINGS, PIPE SLEEVES, CONDUITS, INSERTS, AND OTHER EMBEDDED ITEMS SHALL BE IN PLACE BEFORE CONCRETE IS PLACED. IT IS THE CONTRACTOR'S RESPONSIBILITY TO COORDINATE ARCHITECTURAL, CIVIL, MECHANICAL, ELECTRICAL, LANDSCAPING, HVAC, PLUMBING, INSTRUMENTATION, AND OTHER PLANS FOR ITEMS REQUIRING SLEEVES AND EMBEDMENTS IN CONCRETE WHICH ARE NOT INDICATED OR SHOWN ON STRUCTURAL DRAWINGS. NO PIPES OR SLEEVES SHALL PASS THROUGH STRUCTURAL MEMBERS UNLESS SHOWN ON STRUCTURAL DRAWINGS. COORDINATE WITH EQUIPMENT MANUFACTURER'S DRAWINGS FOR ANCHORING DEVICES.

6. CONCRETE SHALL BE PREVENTED FROM PREMATURE DRYING FOR A CURING PERIOD OF AT LEAST SEVEN DAYS AFTER IT IS PLACED. EXPOSED SURFACES SHALL BE KEPT CONTINUOUSLY MOIST FOR THE ENTIRE PERIOD. IN LIEU OF WATER CURING, THE CONCRETE SHALL BE PROTECTED BY SPRAYING WITH AN APPROVED CURING COMPOUND. ALL SURFACES SHALL BE KEPT MOIST UNTIL THE COMPOUND IS APPLIED.

7. CONTROL JOINTS SHALL BE PLACED NO GREATER THAN 20 FEET APART IN BOTH DIRECTIONS WITHIN 8 HOURS OF THE CONCRETE PLACEMENT ON ALL CONCRETE SLABS. DOES NOT APPLY TO GAC FOUNDATION. PROVIDE CONTROL JOINTS IN UNREINFORCED SLABS PER PCA GUIDELINES.

8. ALL EXTERIOR SLABS SHALL BE SLOPED TO ALLOW DRAINAGE OF RUNOFF WATER TO PREVENT PONDING.

9. UNLESS NOTED OTHERWISE, ALL EXPOSED EDGES AND CORNERS SHALL BE CHAMFERED 3/4 INCH. INTERIOR FLOORS AND EXTERIOR SIDEWALKS SHALL HAVE TOOLED 3/8 INCH RADIUS CONSTRUCTION JOINTS.

10. ALL SLABS SHALL HAVE A TROWELED FINISH.

## GAC VESSEL NOTES

1. REFER TO SUPPLIER SUBMITTAL PACKAGE FOR GAC VESSEL SKID PHYSICAL CONFIGURATION; FIELD ASSEMBLY INSTRUCTIONS; AND INSTALLATION INSTRUCTIONS.

2. CONTRACTOR SHALL TOUCH-UP EXTERIOR COATING OF MANUFACTURER FURNISHED VESSELS AND PIPING DAMAGED DURING OFF-LOADING AND INSTALLATION.

3. THE OWNER, AT ITS DISCRETION MAY HAVE THE INTERIOR LINING OF ALL VESSELS INSPECTED FOR HOLIDAYS AFTER DELIVERY TO THE JOB SITE.

## PIPING

1. ALL PIPE MATERIALS SHALL COMPLY WITH THE PIPE LEGEND ON SHEET C-5, C-6 AND SPECIFICATION 40 05 00.

2. RESTRAIN ALL ON-SITE PRESSURE PIPING IN ACCORDANCE WITH SPECIFICATION 40 05 00. THRUST BLOCKS WILL NOT BE ACCEPTABLE.

3. ALL VALVES WHICH IN THE OPEN POSITION WOULD ALLOW UNTREATED WATER TO BYPASS THE TREATMENT PROCESS (GAC VESSELS) SHALL BE EQUIPPED WITH A LOCKOUT DEVICE:
   a) BURIED GATE VALVES SHALL BE EQUIPPED WITH A LOCKING DEBRIS CAP. SW SERVICES LOCKING DEBRIS CAP OR EQUAL.
   b) ABOVE-GRADE VALVE HANDWHEELS SHALL BE EQUIPPED WITH A LOCKOUT DEVICE. ULINE, BRADY LOCKING COVER OR EQUAL.
   c) LOCKOUT DEVICE LABELS SHALL STATE "CONTACT WATER SYSTEM OPERATOR PRIOR TO OPENING THIS VALVE".

4. UNLESS OTHERWISE NOTED ON THE DRAWINGS OR SPECIFICATIONS, ALL VALVES IN ABOVE-GRADE SERVICE SHALL BE TYPE 1 BUTTERFLY VALVES AND ALL VALVES IN BURIED SERVICE SHALL BE TYPE 5 GATE VALVES AS DESCRIBED IN SPECIFICATION 40 05 23.

5. THE WORK CONTAINED HEREIN SHALL COMPLY WITH TITLE 22 SECTION 64572 OF THE CALIFORNIA CODE OF REGULATIONS. REFER TO DISTRICT STANDARD DETAIL W-55 ON SHEET D-18.

6. ALL ABOVE GRADE PIPE SHALL BE FUSION BONDED EPOXY LINED & COATED STEEL SPECIFIED IN SECTION 09 97 61 OF THE SPECIFICATIONS OR DUCTILE IRON PIPE. PIPE SMALLER THAN 4 INCHES SHALL BE COPPER OR STAINLESS UNLESS OTHERWISE NOTED. PIPE COLOR SHALL BE AS SELECTED BY THE OWNER. BELOW GRADE PIPE SHALL BE C900 PVC OR DUCTILE IRON CONFORMING TO THE REQUIREMENTS OF SPECIFICATION 40 05 00 UNLESS SPECIFICALLY NOTED ON THE PLANS.

7. ALL HARDWARE FOR BURIED PIPE CONNECTIONS SHALL BE STAINLESS STEEL REGARDLESS OF TYPE (RESTRAINED MJ, FLANGE, ETC.).

8. NEW WATER MAINS, GAC VESSELS, TREATED WATER TANK, AND TREATMENT EQUIPMENT SHALL BE DISINFECTED AND TESTED FOR BACTERIOLOGICAL CONTAMINATION IN ACCORDANCE WITH THE SPECIFICATIONS PRIOR TO BEING PLACED INTO SERVICE.

9. WHERE SPECIALIZED FITTINGS (E.G. CROSSES) ARE SHOWN ON THE PLANS, THE CONTRACTOR MAY PROPOSE ALTERNATE PIPING ARRANGEMENTS USING FITTINGS WITH IMPROVED AVAILABILITY (E.G. TEES) FOR REVIEW BY THE ENGINEER PROVIDED THAT THE PROCESS FUNCTIONALITY IS MAINTAINED.

10. PROVIDE 3' MINIMUM COVER OVER BURIED PIPELINES UNLESS OTHERWISE NOTED.

11. ALL THREADED NOZZLES 3-INCHES AND SMALLER SHALL INCLUDE NYLON DIELECTRIC ISOLATION BUSHINGS. ALL LARGER NOZZLES INVOLVING DISSIMILAR METALS OTHER THAN STEEL JOINED TO DUCTILE IRON SHALL INCLUDE DIELECTRIC ISOLATION GASKET AND BOLT KITS.

12. ALL NOZZLES ON DUCTILE IRON PIPE SHALL BE WELDED. SERVICE SADDLES WILL NOT BE ACCEPTED.

13. FIELD LOCK GASKETS WILL BE ACCEPTED FOR RESTRAINT OF BURIED DUCTILE IRON PIPE.

## GRADING

1. THE WORK EMBRACED HEREIN SHALL BE DONE IN ACCORDANCE WITH THE APPROPRIATE PROVISIONS OF CHAPTER 33 OF 2019 CALIFORNIA BUILDING CODE AS ADOPTED.

2. THE CONTRACTOR SHALL OBTAIN WRITTEN AUTHORIZATION FROM ANY PROPERTY OWNER GIVING HIM PERMISSION TO ENTER HIS PROPERTY FOR THE PURPOSES OF CONSTRUCTING THE IMPROVEMENTS DELINEATED ON THE PLANS AND TRANSITIONS THERETO.

3. ANY DIRT OR DEBRIS TRACKED ONTO ANY EXISTING ROAD FROM THIS PROJECT SHALL BE CLEANED OFF AT THE END OF EACH WORKING DAY TO THE SATISFACTION OF THE DISTRICT.

4. GRADING CONTRACTOR SHALL REMOVE ALL ORGANIC MATTER, DEBRIS, AND OTHER DELETERIOUS OR EXCESS MATERIAL FROM THE SITE AND DISPOSE OF AT AN APPROVED LOCATION.

5. ANY SURVEY MONUMENTS WITHIN THE AREA OF WORK SHALL BE PRESERVED OR RESET BY A LICENSED LAND SURVEYOR.

6. THE CONTRACTOR SHALL MAKE ADEQUATE PROVISION FOR DUST CONTROL FOR THE DURATION OF THE WORK. DUST CONTROL MEASURES SHALL BE FULLY AND ADEQUATELY CARRIED OUT ON WEEKDAYS, WEEKENDS AND HOLIDAYS, AND WHEN NECESSARY, BEFORE OR AFTER NORMAL WORKING HOURS.

7. ALL SEWER, STORM DRAIN AND UTILITY MANHOLES AFFECTED BY THIS PROJECT SHALL BE ADJUSTED TO GRADE AS NECESSARY BY THE CONTRACTOR AND INCLUDED IN THIS WORK. ALL WATER MAIN VALVES (CAP AND LID) SHALL BE ADJUSTED TO GRADE AS NECESSARY BY THE CONTRACTOR AND INCLUDED IN THIS WORK.

8. THE COSTS OF ALL REPEAT TESTING REQUIRED FOR ACCEPTANCE OF WORK SHALL BE FULLY BORNE BY THE CONTRACTOR.

### PIPING SCHEDULE

| PROCESS ABBREVIATIONS | SERVICE | LOCATION | CLASSIFICATION | PIPE MATERIAL | THICKNESS/ PRESSURE CLASS | RESTRAINED JOINTS | JOINTS/ FITTINGS | TEST PRESSURE | TEST METHOD | LINING | COATING |
|---|---|---|---|---|---|---|---|---|---|---|---|
| INF | GAC INFLUENT | EXPOSED | PRESSURE | WSP | PER §40 05 00 | RESTRAINED | FLG or GE | 100 PSI | PER §40 05 00 | FBE | FBE |
| | | EXPOSED | PRESSURE | DIP | PER §40 05 00 | RESTRAINED | FLG or GE | 100 PSI | PER §40 05 00 | CM | EP |
| | | BURIED | PRESSURE | DIP | PER §40 05 00 | RESTRAINED | PO or MJ | 100 PSI | PER §40 05 00 | CM | BSC, PEE |
| EFF | GAC EFFLUENT | EXPOSED | PRESSURE | WSP | PER §40 05 00 | RESTRAINED | FLG or GE | 100 PSI | PER §40 05 00 | FBE | FBE |
| | | EXPOSED | PRESSURE | DIP | PER §40 05 00 | RESTRAINED | FLG or GE | 100 PSI | PER §40 05 00 | CM | EP |
| | | BURIED | PRESSURE | DIP | PER §40 05 00 | RESTRAINED | PO or MJ | 100 PSI | PER §40 05 00 | CM | BSC, PEE |
| BW | GAC BACKWASH | EXPOSED | PRESSURE | WSP | PER §40 05 00 | RESTRAINED | FLG or GE | 100 PSI | PER §40 05 00 | FBE | FBE |
| | | EXPOSED | PRESSURE | DIP | PER §40 05 00 | RESTRAINED | FLG or GE | 100 PSI | PER §40 05 00 | CM | EP |
| | | BURIED | PRESSURE | DIP | PER §40 05 00 | RESTRAINED | PO or MJ | 100 PSI | PER §40 05 00 | CM | BSC, PEE |
| SD | STORM DRAIN | BURIED | GRAVITY | PVCG | PER §40 05 00 | UNRESTRAINED | PO or MJ | 3 PSI | PER §40 05 00 | – | – |
| PW | POTABLE WATER | BURIED | PRESSURE | DIP | PER §40 05 00 | RESTRAINED | PO or MJ | 100 PSI | PER §40 05 00 | CM | BSC, PEE |
| | | BURIED | PRESSURE | C900 | PER §40 05 00 | RESTRAINED | PO or MJ | 100 PSI | PER §40 05 00 | – | – |

| | | | | | | | |
|---|---|---|---|---|---|---|---|
| C900 | AWWA C900 STANDARD | FLG | FLANGE | BSC | BITUMINOUS SEAL COATED PER AWWA C105 | FBE | FUSION BONDED EPOXY §09 97 61 |
| DIP | DUCTILE IRON PIPE | GE | GROOVED END | CM | CEMENT MORTAR PER AWWA C104 | PEE | POLYETHYLENE ENCASEMENT §40 05 00 PER AWWA |
| PVCG | POLYVINYL CHLORIDE GRAVITY | MJ | MECHANICAL JOINT | EP | EPOXY POLYURETHANE §09 99 00 SYSTEM 2 | | |
| WSP | WELDED STEEL PIPE | PO | PUSH ON JOINT | | | | |

COPYRIGHT 2021 by PROVOST & PRITCHARD ENGINEERING GROUP, INC. ALL RIGHTS RESERVED
The firm of Provost & Pritchard Engineering Group, Inc. expressly reserves its common law copyright and other applicable property rights in these plans. These plans are not to be reproduced, changed, or copied in any form or manner whatsoever, nor are they to be assigned to a third party without first obtaining the written permission and consent of Provost & Pritchard Engineering Group, Inc. In the event of unauthorized reuse of these plans by a third party, the third party shall hold the firm of Provost & Pritchard Engineering Group, Inc. harmless, and shall bear the cost of Provost & Pritchard Engineering Group, Inc.'s legal fees associated with defending and enforcing these rights.

BID ISSUE
10-12-2021

| No. | REVISION | BY | DATE |
|---|---|---|---|

REGISTERED PROFESSIONAL ENGINEER R. KEVIN BERRYHILL No. 70415 CIVIL STATE OF CALIFORNIA

DATE SIGNED: 10/12/2021

1,2,3-TCP REMOVAL PROJECT FOR
CONEJO WELLS
CAMROSA WATER DISTRICT
CAMARILLO, CA

GENERAL

GENERAL NOTES

EST. 1968
PROVOST & PRITCHARD
CONSULTING GROUP
An Employee Owned Company
455 W FIR AVENUE
CLOVIS, CALIFORNIA 93611
559/449-2700 FAX 559/449-2715
https://provostandpritchard.com/

DESIGN ENGINEER: KEVIN BERRYHILL
LICENSE NO: 70415
DRAFTED BY: JB
CHECKED BY: RKB
DATE: 10/11/2021
JOB NO: 295820002
PROJECT NO: 295820002
PHASE:

0 1"
ORIGINAL SCALE SHOWN IS ONE INCH. ADJUST SCALE FOR REDUCED OR ENLARGED PLANS.

SHEET G-3



10/12/2021 9:37 AM g:\camrosa water district-2958\295820002-camrosa gac design project\300 CAD\340 sheet sets\01_General\G-3 GENERAL NOTES.dwg -Jordan Noel

## SPECIAL INSPECTION NOTES

1. THE CONTRACTOR SHALL NOTIFY THE OWNER'S REPRESENTATIVE 48 HOURS BEFORE PLACEMENT OF REINFORCING STEEL AND CONCRETE SO THAT THE SUBGRADE OF EXCAVATIONS MAY BE INSPECTED BY THE GEOTECHNICAL ENGINEER. THE GEOTECHNICAL ENGINEER SHALL VERIFY BACKFILL MATERIAL, BACKFILLING PROCEDURES AND SOIL COMPACTION TESTS.
2. STRUCTURAL OBSERVATION SHALL BE PROVIDED BY THE DESIGN ENGINEER(S) OF RECORD OR THEIR AUTHORIZED REPRESENTATIVES IN ACCORDANCE WITH CBC 2019, SECTION 1704. STRUCTURAL OBSERVATION SHALL CONSIST OF SITE VISITS AT INTERVALS APPROPRIATE TO THE STAGE OF CONSTRUCTION TO OBSERVE CONSTRUCTION IN PROGRESS AND REVIEW OF TESTING AND INSPECTION REPORTS FOR GENERAL COMPLIANCE WITH THE CONSTRUCTION DOCUMENTS RELATING TO THE STRUCTURAL WORK AND THE NONSTRUCTURAL COMPONENTS AND EQUIPMENT ANCHORAGE.
3. SPECIAL INSPECTION IN ACCORDANCE WITH CBC 2019 SECTIONS 1704 & 1705, SHALL BE REQUIRED AS INDICATED IN THE SPECIAL INSPECTION AND TESTING SCHEDULE ON THIS SHEET.
4. ALL SPECIAL INSPECTIONS REQUIRED MUST BE BY APPROVED INDEPENDENT INSPECTORS WHO SHALL BE RETAINED BY THE OWNER. INSPECTORS SHALL SUBMIT THEIR REPORTS DIRECTLY TO THE BUILDING OFFICIAL AND THE REGISTERED DESIGN PROFESSIONAL IN RESPONSIBLE CHARGE. THESE INSPECTORS ARE IN ADDITION TO ANY REQUIRED OWNER INSPECTIONS. CONTRACTOR SHALL COORDINATE INSPECTIONS AND ALLOW ACCESS FOR THE SPECIAL INSPECTOR TO PERFORM REQUIRED INSPECTIONS.
5. SPECIAL INSPECTIONS FOR STRUCTURAL STEEL SHALL BE IN ACCORDANCE WITH AISC 360.

### REQUIRED VERIFICATION AND INSPECTION OF CONCRETE CONSTRUCTION (CBC TABLE 1705.3)

| VERIFICATION AND INSPECTION | CONTINUOUS SPECIAL INSPECTION | PERIODIC SPECIAL INSPECTION | REFERENCES |
|---|---|---|---|
| 1. INSPECTION OF REINFORCING STEEL, INCLUDING PRESTRESSING TENDONS AND PLACEMENT | – | X | ACI 318: CH. 20, 25.2, 25.3, 26.6, 1–26.6.3 CBC 1908.4 |
| 2. REINFORCING BAR WELDING:<br>A. VERIFY WELDABILITY OF REINFORCING BARS OTHER THAN ASTM A706.<br>B. INSPECT SINGLE–PASS FILLET WELDS, MAXIMUM 5/16"; AND<br>C. INSPECT ALL OTHER WELDS. | <br>–<br><br>X | <br>X<br>X<br> | AWS D1.4, ACI 318: 26.6.4 |
| 3. INSPECTION OF ANCHORS CAST IN CONCRETE | – | X | ACI 318: 17.8.2 |
| 4. INSPECT ANCHORS POST–INSTALLED IN HARDENED CONCRETE MEMBERS.<br>A. ADHESIVE ANCHORS INSTALLED IN HORIZONTALLY OR UPWARD INCLINED ORIENTATIONS TO RESIST SUSTAINED TENSION LOADS.<br>B. MECHANICAL ANCHORS AND ADHESIVE ANCHORS NOT DEFINED IN 4.A | X | X | ACI318:17.8.2.4<br>ACI 318: 17.8.2 |
| 5. VERIFYING USE OF REQUIRED DESIGN MIX | – | X | ACI 318: CH. 19, 26.4.3, 26.4.4 CBC 1904.1, 1904.2, 1908.2, 1908.3 |
| 6. PRIOR TO CONCRETE PLACEMENT, FABRICATE SPECIMENS FOR STRENGTH TESTS, PERFORM SLUMP AND AIR CONCTENT TESTS, AND DETERMINE THE TEMPERATURE OF THE CONCRETE. | – | X | ASTM C172<br>ASTM C31<br>ACI 318: 26.5, 26.12<br>CBC 1908.10 |
| 7. INSPECTION OF CONCRETE AND SHOTCRETE PLACEMENT FOR PROPER APPLICATION TECHNIQUES | X | – | ACI 318: 26.5 CBC 1908.6, 1908.7, 1908.8 |
| 8. VERIFY MAINTENANCE OF SPECIFIED CURING TEMPERATURE AND TECHNIQUES | – | X | ACI 318: 26.5.3–26.5.5 CBC 1908.9 |
| 9. INSPECT PRESTRESSED CONCRETE FOR:<br>A. APPLICATION OF PRESTRESSING FORCES; AND<br>B. GROUTING OF BONDED PRESTRESSING TENDONS. | X<br>X | –<br>– | ACI 318: 26.10 |
| 10. INSPECT ERECTION OF PRECAST CONCRETE MEMBERS | – | X | ACI 318, 26.9 |
| 11. VERIFY IN–SITU CONCRETE STRENGTH, PRIOR TO STRESSING OF TENDONS IN POST–TENSIONED CONCRETE AND PRIOR TO REMOVAL OF SHORES AND FORMS FROM BEAMS AND STRUCTURAL SLABS. | – | X | ACI 318: 26.11.1.2 |
| 12. INSPECT FORMWORK FOR SHAPE, LOCATION AND DIMENSIONS OF THE CONCRETE MEMBER BEING FORMED. | – | X | ACI 318: 26.11.1.2(B) |

### REQUIRED VERIFICATION AND INSPECTION OF ANCHORS

| VERIFICATION AND INSPECTION | CONTINUOUS | PERIODIC | COMMENTS | REFERENCES |
|---|---|---|---|---|
| 1. INSPECTION OF ANCHORS POST–INSTALLED IN HARDENED CONCRETE MEMBERS | | X | | ACI 318, 3.8.6, 8.1.5, 21.2.8 CBC 1909.1 |

### REQUIRED VERIFICATION AND INSPECTION OF SOILS (CBC TABLE 1705.6)

| VERIFICATION AND INSPECTION | CONTINUOUS | PERIODIC | COMMENTS | REFERENCES |
|---|---|---|---|---|
| 1. VERIFY MATERIALS BELOW SHALLOW FOUNDATIONS ARE ADEQUATE TO ACHIEVE THE DESIGN BEARING CAPACITY | | X | | CBC 1705.6 CBC 1804 |
| 2. VERIFY EXCAVATIONS ARE EXTENDED TO PROPER DEPTH AND HAVE REACHED PROPER MATERIAL | | X | | |
| 3. PERFORM CLASSIFICATION AND TESTING OF COMPACTED FILL MATERIALS | | X | | |
| 4. VERIFY USE OF PROPER MATERIALS, DENSITIES AND LIFT THICKNESSES DURING PLACEMENT AND COMPACTION OF COMPACTED FILL | X | | | |
| 5. PRIOR TO PLACEMENT OF COMPACTED FILL, OBSERVE SUBGRADE AND VERIFY THAT SITE HAS BEEN PREPARED PROPERLY | | X | | |

## SOIL AND FOUNDATION NOTES

1. ALL CONCRETE FOOTINGS AND SLABS SHALL BEAR UPON AND/OR PENETRATE INTO PROPERLY COMPACTED FILL WHICH SHALL HAVE A MINIMUM IN–PLACE DENSITY OF 90% OF MAXIMUM DENSITY AT OPTIMUM MOISTURE CONTENT AT THE PROJECT SITE. IN CASE OF EXPANSIVE CLAY SOIL CONDITIONS, THE OWNER MUST CONSULT WITH A GEOTECHNICAL ENGINEER AND THE FOUNDATION PLAN MUST BE APPROVED BY THE GEOTECHNICAL ENGINEER.
2. FOUNDATION WORK TO BE DONE PER 2019 CBC, CHAPTER 18.
3. THE SOILS IN THE PROJECT ARE GENERALLY CLASSIFED AS CLAYS AND SILTS.
4. ENGINEERING DESIGN OF FOUNDATION IS BASED ON:
   GEOTECHNICAL INVESTIGATION REPORT TITLED:
   GEOTECHNICAL ENGINEERING INVESTIGATION REPORT
   GAC TREATMENT PROJECT – CAMROSA WATER DISTRICT
   CAMARILLO, CA BSK PROJECT# G21–033–11B
   DATE WHEN GEOTECHNICAL REPORT WAS PREPARED: 04/28/2021
   NAME OF GEOTECHNICAL ENGINEERING COMPANY: BSK ASSOCIATES
   PHONE NUMBER OF GEOTECHNICAL ENGINEER: (661) 327–0671
5. ENGINEERING DESIGN OF FOUNDATION IS BASED ON:
   a) ASSUMED ALLOWABLE SOIL BEARING CAPACITY OF 2,000 PSF FOR DEAD AND LIVE LOADS AND 2,667 PSF FOR WIND AND SEISMIC LOAD COMBINATIONS
   b) ALLOWABLE SOIL FRICTION COEFFICIENT OF 0.30
   **SHOULD THE ACTUAL SOIL CONDITIONS NOT BE EQUAL TO OR BETTER THAN THE MINIMUM REQUIREMENTS SHOWN ABOVE, NOTIFY THE ENGINEER OF RECORD IMMEDIATELY.**
6. NOTIFY THE GEOTECHNICAL ENGINEER FOR INSTRUCTIONS PRIOR TO CONTINUING WORK SHOULD ANY UNUSUAL CONDITIONS BECOME APPARENT DURING GRADING OR FOUNDATION EXCAVATION. THE CONTRACTOR IS RESPONSIBLE FOR FOLLOWING THE RECOMMENDATIONS OUTLINED IN THE GEOTECHNICAL REPORT.
7. SOIL SHALL BE EXCAVATED AS OUTLINED IN THE GEOTECHNICAL REPORT FOR STRUCTURE FOUNDATIONS.
8. ALL FOUNDATION EXCAVATIONS MUST BE REVIEWED AND APPROVED PRIOR TO PLACEMENT OF CONCRETE.

## REINFORCING STEEL NOTES

1. REINFORCING SHALL LAP A MINIMUM OF 1.3 Ld AT SPLICES UNLESS OTHERWISE SHOWN, WHERE Ld IS THE TENSION DEVELOPMENT LENGTH. WHEN BARS OF DIFFERENT SIZE LAP TO EACH OTHER, SPLICE LENGTH FOR THE SMALLER BAR CAN BE USED. DOWELS SHALL HAVE THE SAME SIZE AND SPACING AS THAT OF THE REINFORCING STEEL THEY ARE SPLICING AND SHALL HAVE A MINIMUM LAP AS NOTED ABOVE. BAR SPLICES SHALL BE STAGGERED.
2. HOOK BARS AT OPENINGS.
3. TERMINATE ALL BARS IN LAPS OR 90° BENDS.
4. ALL REINFORCING MAY LAP WITH COUPLERS WHICH ARE 125% OF BAR STRENGTH OR GREATER. SUMBIT AN ICC REPORT FOR COUPLERS.
5. IF ONE LAYER OF REINFORCING STEEL IS SHOWN, IT IS TO BE LOCATED IN THE CENTER OF THE SECTION UNLESS NOTED OTHERWISE.
6. DIMENSIONS TO REINFORCING ARE TO BAR CENTERLINES, UNLESS NOTED OTHERWISE. BAR COVER IS CLEAR DISTANCE BETWEEN THE BAR AND THE CONCRETE SURFACE. UNLESS NOTED OR SHOWN OTHERWISE, BAR COVER FOR REINFORCING STEEL SHALL BE AS FOLLOWS:

### CONCRETE REINFORCEMENT COVER

| SIZE | COVER (IN) |
|---|---|
| CONCRETE CAST AGAINST AND PERMANENTLY EXPOSED TO EARTH | |
| ALL SIZES | 3 |
| CONCRETE EXPOSED TO EARTH OR WEATHER | |
| #6 – #18 BAR | 2 |
| #5 BAR, W31 OR D31 WIRE, AND SMALLER | 1 1/2 |
| CONCRETE NOT EXPOSED TO WEATHER OR IN CONTACT WITH GROUND | |
| #14 & #18 BARS | 1 1/2 |
| #11 BAR & SMALLER | 3/4 |

## STEEL NOTES

1. ALL EXPOSED STEEL SHALL BE HOT DIP GALVANIZED [OR PAINTED WITH A MINIMUM OF ONE (1) COAT OF RUST INHIBITIVE PRIMER AFTER BEING THOROUGHLY CLEANED OF ALL LOOSE SCALE AND RUST].
2. STRUCTURAL STEEL SHALL CONFORM TO THE FOLLOWING, UNLESS SPECIFIED OTHERWISE:
   a. STRUCTURAL SHAPES M, S, HP, C, MC, L, AS PER AISC MANUAL LATEST EDITION, TO COMPLY WITH ASTM A36 (Fy=36 ksi) UNLESS NOTED OTHERWISE.
   b. STRUCTURAL SHAPES W, AISC MANUAL LATEST EDITION, TO COMPLY WITH ASTM A992 (Fy=50 ksi) UNLESS NOTED OTHERWISE.
   c. STRUCTURAL STEEL TUBING, AS PER AISC MANUAL LATEST EDITION, TO COMPLY WITH ASTM A500 GRADE B (Fy=46 ksi) UNLESS NOTED OTHERWISE.
   d. STRUCTURAL STEEL PIPE, AS PER AISC MANUAL 13th EDITION, TO COMPLY WITH ASTM A53 GRADE B (Fy=35 ksi) UNLESS NOTED OTHERWISE.
3. ANY MATERIAL REQUEST WITH DIFFERENT SPECIFICATIONS THAN NOTED ABOVE ARE TO BE DIRECTED TO THE ENGINEER, IN A TIMELY MANNER, PRIOR TO CONSTRUCTION AND/OR INSTALLATION. ANY ITEM OF A DIFFERENT SPECIFICATION INSTALLED, WITHOUT SPECIFIC PRIOR WRITTEN APPROVAL MAY NOT MEET THE PROJECT ENGINEERING REQUIREMENTS NECESSITATING A REMOVAL AND/OR SIGNIFICANT REVISION TO ITEMS INSTALLED.
4. STRUCTURAL STEEL DETAILING, FABRICATION AND ERECTION SHALL BE IN ACCORDANCE WITH THE 13th EDITION OF THE AISC MANUAL AND THE LATEST EDITION OF STRUCTURAL STEEL DETAILING BY THE AISC.
5. A STEEL BUILDING IS STRUCTURALLY STABLE WHEN ALL ASPECTS OF THE DESIGN SHOWN ON THESE DRAWINGS ARE COMPLETED. THE CONTRACTOR SHALL DETERMINE WHEN AND WHERE TEMPORARY BRACING IS NEEDED.
6. WELDS SHALL BE MADE WITH WIRE OR ELECTRODE HAVING A MINIMUM TENSILE STRENGTH OF 70,000 PSI, UNLESS NOTED OTHERWISE.

## LOADING CRITERIA

| | |
|---|---|
| RISK CATEGORY OF BUILDING: | IV |
| 1. WIND LOAD: | |
| ULTIMATE DESIGN WIND SPEED | 105 MPH |
| EXPOSURE | C |
| INTERNAL PRESSURE COEFFICIENT | 0.8 |
| COMPONENTS & CLADDING | 1.3 |
| DESIGN WIND PRESSURE | |
| ROOF | 27 PSF |
| WALL | 18 PSF |
| 2. SEISMIC LOAD: | |
| SPECTRAL RESPONSE ACCELERATION $S_s$ | 1.665g |
| SPECTRAL RESPONSE ACCELERATION $S_1$ | 0.613g |
| SPECTRAL RESPONSE COEFFICIENTS $S_{DS}$ | 1.238g |
| SPECTRAL RESPONSE COEFFICIENT $S_{D1}$ | 1.183g |
| SEISMIC IMPORTANCE FACTOR Is | 1.5 |
| SITE CLASS | D |
| SEISMIC DESIGN CATEGORY | D |
| SEISMIC FORCE RESISTING SYSTEM | VARIES |
| DESIGN BASE SHEAR | VARIES |
| SEISMIC RESPONSE COEFFICIENT $C_s$ | VARIES |
| RESPONSE MODIFICATION FACTOR R | VARIES |
| ANALYSIS PROCEDURE | ELF |
| AMPLIFICATION FACTOR $F_A$ | 1 |
| AMPLIFICATION FACTOR $F_V$ | 1.7 |
| SITE ADJUSTED SPECTRAL EXCELERATION $S_{MS}$ | 1.665 |
| SITE ADJUSTED SPECTRAL EXCELERATION $S_M1$ | 1.042 |
| GEOMETRIC MEAN $PGA_M$ | 0.723 |
| LONG PERIOD TRANSITION | 12 SECONDS |
| 3. WATER LOAD: | |
| DESIGN HIGH WATER LEVEL | N/A |

WARNING
POWER LINES OVERHEAD

811
Know what's below. Call before you dig.

COPYRIGHT 2021 by PROVOST & PRITCHARD ENGINEERING GROUP, INC. ALL RIGHTS RESERVED
The firm of Provost & Pritchard Engineering Group, Inc. expressly reserves its common law copyright and other applicable property rights in these plans. These plans are not to be reproduced, changed, or copied in any form or manner whatsoever, nor are they to be assigned to a third party without first obtaining the written permission and consent of Provost & Pritchard Engineering Group, Inc. In the event of unauthorized reuse of these plans by a third party, the third party shall hold the firm of Provost & Pritchard Engineering Group, Inc. harmless, and shall bear the cost of Provost & Pritchard Engineering Group, Inc.'s legal fees associated with defending and enforcing these rights.

BID ISSUE
10-12-2021

| No. | REVISION | BY | DATE |
|---|---|---|---|

REGISTERED PROFESSIONAL ENGINEER R. KEVIN BERRYHILL No. 70415 CIVIL STATE OF CALIFORNIA
DATE SIGNED: 10/12/2021

1,2,3–TCP REMOVAL PROJECT FOR
CONEJO WELLS
CAMROSA WATER DISTRICT
CAMARILLO, CA

GENERAL

GENERAL NOTES

EST. 1968
PROVOST & PRITCHARD
CONSULTING GROUP
An Employee Owned Company
455 W FIR AVENUE
CLOVIS, CALIFORNIA 93611
559/449-2700 FAX 559/449-2715
https://provostandpritchard.com/

DESIGN ENGINEER: KEVIN BERRYHILL
LICENSE NO: 70415
DRAFTED BY: JB
CHECKED BY: RKB
DATE: 10/11/2021
JOB NO: 295820002
PROJECT NO: 295820002
PHASE:

0 1"
ORIGINAL SCALE SHOWN IS ONE INCH. ADJUST SCALE FOR REDUCED OR ENLARGED PLANS.

SHEET G-4



10/12/2021 9:38 AM g:\camrosa water district–2958\295820002–camrosa gac design project\300 CAD\340 sheet sets\01_General\G–4 GENERAL NOTES.dwg –Jordan Noel

| WELL PUMP DESIGN CRITERIA | | | | |
|---|---|---|---|---|
| DESCRIPTION | CONEJO 2 | CONEJO 3 | CONEJO 4 | SANTA ROSA 8[1] |
| EXISTING | | | | |
| LUBRICATION | WATER | WATER | WATER | OIL |
| FLOW, GPM | 610 | 725 | 1,000 | 815 |
| HEAD, FT | UNKNOWN | 275 | UNKNOWN | 180 |
| HORSEPOWER VFD, HP | 50 | 75 | 75 | 50 |
| NEW | | | | |
| LUBRICATION | WATER | WATER | WATER | WATER |
| FLOW, GPM | 824 | 860 | 860 | 860 |
| HEAD, FT | 313 | 340 | 340 | 340 |
| HORSEPOWER VFD, HP | 100 | 100 | 100 | 100 |
| TREATMENT PLANT DESIGN CAPACITY, GPM | 2,350 (EXPANDABLE TO 3,150 GPM) | | | |

[1]SANTA ROSA WELL 8 TO BE CONVERTED FROM OIL LUBRICATION TO WATER LUBRICATION.

NOTE:
THE WELLS ARE BEING REHABILITATED AND THE WELL PUMPS REPLACED AS PART OF A SEPARATE PROJECT. THE CONTRACTOR IS RESPONSIBLE FOR ALL OTHER WELL IMPROVEMENTS DESCRIBED IN THE PLANS AND SPECIFICATION INCLUDING, BUT NOT LIMITED TO, CONNECTING A PRE-LUBRICATION SYSTEM TO SANTA ROSA 8, REPLACING THE DOWN-HOLE DISINFECTION LINES FOR CONEJO 3 AND SANTA ROSA 8 AND ELECTRICAL AND INSTRUMENTATION WORK.

| GAC DESIGN CRITERIA | | | | | |
|---|---|---|---|---|---|
| DESCRIPTION | CONEJO 2 | CONEJO 3 | CONEJO 4 | SANTA ROSA 8 | NOTES |
| RAW WATER QUALITY | | | | | |
| MAX TCP, ug/L | 0.035 | 0.018 | 0.075 | 0.01 | |
| MAX NITRATE, mg/L (AS N) | 32.98 | 30.04 | 31.4 | 25.98 | |
| MAX HARDNESS AS $CaCO_3$, mg/L | 688 | 648 | 700 | 525 | |
| TOC, mg/L | 0.3 | 0.4 | 0.3 | 0.5 | |
| PH | 7.44 | 7.41 | 7.43 | 7.31 | |
| GAC TREATMENT DESIGN | INITIAL | | BUILDOUT | | |
| NUMBER OF VESSELS | 6 | | 10 | | |
| VESSEL DIA (EA), FT | 12 | | 12 | | |
| CARBON CAPACITY (EA), $FT^3$ | 714 | | 714 | | |
| CARBON TYPE | TBD | | TBD | | |
| OPERATION | SERIES (LEAD-LAG) | | SERIES (LEAD-LAG) | | |
| HYDRAULIC LOADING RATE, GPM/SF | 6.9 (@ 2,350 GPM) | | 5.6 (@ 3,150 GPM) | | |
| EMPTY BED CONTACT TIME, MINUTES | 13.6 (@ 2,350 GPM) | | 17 (@3,150 GPM) | | |
| MINIMUM FLOW OPERATION (250 GPM) | 1 PAIR OF VESSELS (LEAD-LAG) | | | | OTHER PAIRS ISOLATED OFF |
| HYDRAULIC LOADING RATE, GPM/SF | 2.2 (@ 250 GPM) | | | | |
| EMPTY BED CONTACT TIME, MINUTES | 42.7 (@ 250 GPM) | | | | |
| GAC BACKWASH DESIGN | | | | | |
| MAX BACKWASH FLOW RATE, GPM | 1,500 | | | | CARBON SPECIFIC |
| BACKWASH TIME, TYP, MINUTES | 30 (EST.) | | | | CARBON SPECIFIC |
| BACKWASH VOLUME PER EACH VESSEL, GAL | 45,000 (EST.) | | | | CARBON SPECIFIC |
| BACKWASH TANK | | | | | |
| TANK USABLE VOLUME, GAL | 126,000 | | | | |
| TANK DIAMETER, FT | 33 | | | | |
| TANK HEIGHT, FT | 24 | | | | |
| TANK MAX WATER LEVEL, FT | 20 | | | | |
| TREATED WATER TANK | | | | | |
| USABLE VOLUME, GAL | 85,000 | | | | |
| DIAMETER, FT | 27 | | | | |
| HEIGHT, FT | 24 | | | | |
| MAX WATER LEVEL, FT | 20 | | | | |
| NON-POTABLE WATER PUMPS | | | | | |
| DRIVE TYPE | VFD | | | | QUANTITY 2 (DUTY & STANDBY) |
| MAX FLOW RATE, GPM | 1,000 | | | | |
| TDH, FT | 230 | | | | |
| HORSEPOWER, HP | 100 | | | | |

| CHEMICAL SYSTEM DESIGN CRITERIA | | |
|---|---|---|
| PARAMETER | VALUE | UNIT |
| MAX PROCESS FLOW | 2,350 (3,150) | GPM |
| MIN PROCESS FLOW | 250 | GPM |
| MAX MONTHLY TREATED | 100 | MG |
| AVG MONTHLY TREATED | 72 | MG |
| | | |
| CARBON DIOXIDE SYSTEM | | |
| MAX DOSE | 25 | mg/L |
| MAX FEED RATE | 30 (40) | LB/HR |
| MIN FEED RATE | 6.3 | LB/HR |
| FEED SYS CAPACITY | 30 (40) | LB/HR |
| CARRIER WATER | 30 (40) | GPM |
| AVG USAGE | 7.5 | TON/MONTH |
| MAX USAGE | 10.4 | TON/MONTH |
| STORAGE CAPACITY | 14 | TON |
| | | |
| SODIUM HYDROXIDE SYSTEM (50%) | | |
| MAX DOSE | 20 | mg/L |
| MAX FEED RATE | 3.7 (5.0) | GPH |
| MIN FEED RATE | 2 | GPH |
| PUMP MODEL | (2) BLUE WHITE M-3 (DUTY + STANDBY) | - |
| PUMP CAPACITY | 33 | GPH |
| EST. TUBE LIFE | 2,800 | HOURS |
| AVG USAGE | 1880 | GAL/MONTH |
| MAX USAGE | 2614 | GAL/MONTH |
| STORAGE CAPACITY | 5,000 | GAL |
| TANK SIZE | 10' X 13'H | FEET |

## SYSTEM DESIGN CRITERIA

COPYRIGHT 2021 by PROVOST & PRITCHARD ENGINEERING GROUP, INC. ALL RIGHTS RESERVED
The firm of Provost & Pritchard Engineering Group, Inc. (author of these plans) expressly reserves its common law copyright and other applicable property rights in these plans. These plans are not to be reproduced, changed, or copied in any form or manner whatsoever, nor are they to be assigned to a third party without first obtaining the express written permission and consent of Provost & Pritchard Engineering Group, Inc. In the event of unauthorized reuse of these plans by a third party, Provost & Pritchard Engineering Group, Inc. shall be held harmless, and shall be indemnified by said third party. Provost & Pritchard Engineering Group, Inc. has provided professional services in the preparation of these plans only for the benefit of the client for whom Provost & Pritchard Engineering Group, Inc. has contracted. Provost & Pritchard Engineering Group, Inc. has no liability for any use of these plans except for the use intended by Provost & Pritchard Engineering Group, Inc. at the time of preparation. Any unauthorized use of these plans is at the sole risk of the party making such use. The client agrees to defend, indemnify, and hold Provost & Pritchard Engineering Group, Inc. harmless from all claims, damages, and liabilities arising from any such unauthorized use. Provost & Pritchard Engineering Group, Inc. also reserves all other legal rights and remedies associated with defending and enforcing these rights.

| No. | REVISION | BY | DATE |
|---|---|---|---|
| | BID ISSUE 10-12-2021 | | |

REGISTERED PROFESSIONAL ENGINEER KEVIN M. BERRYHILL No. 70415 STATE OF CALIFORNIA
DATE SIGNED: 10/12/2021

1,2,3-TCP REMOVAL PROJECT FOR
CONEJO WELLS
CAMROSA WATER DISTRICT
CAMARILLO, CA

GENERAL

DESIGN CRITERIA

EST 1968 PROVOST& PRITCHARD CONSULTING GROUP
An Employee Owned Company
455 W. FIR AVENUE
CLOVIS, CALIFORNIA 93611
559.449.2700 FAX 559.449.2715
https://provostandpritchard.com/

DESIGN ENGINEER: KEVIN BERRYHILL
LICENSE NO: 70415
DRAFTED BY: JB | CHECKED BY: RKB
DATE: 10/11/2021
JOB NO: 295820002
PROJECT NO: 295820002
PHASE:
0 1"
ORIGINAL SCALE SHOWN IS ONE INCH. ADJUST SCALE FOR REDUCED OR ENLARGED PLANS.

SHEET G-5
5 OF 54

10/12/2021 9:38 AM g:\camrosa water district-2958\295820002-camrosa gac design project\300 CAD\340 sheet sets\01_General\G-8 DESIGN CRITERIA.dwg -Jordan Noel

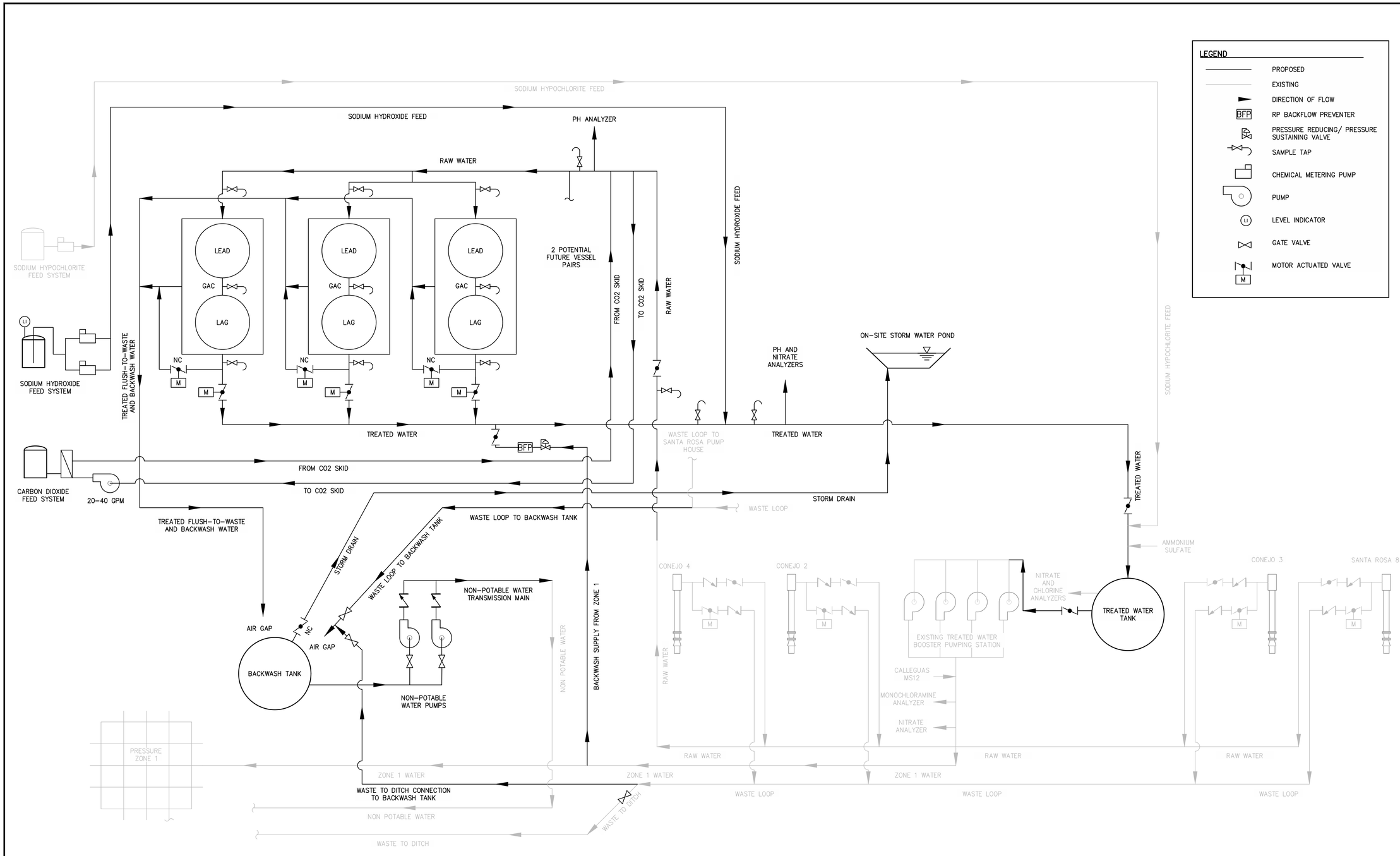


LEGEND

- PROPOSED
- EXISTING
- DIRECTION OF FLOW
- BFP — RP BACKFLOW PREVENTER
- PRESSURE REDUCING/ PRESSURE SUSTAINING VALVE
- SAMPLE TAP
- CHEMICAL METERING PUMP
- PUMP
- LI — LEVEL INDICATOR
- GATE VALVE
- M — MOTOR ACTUATED VALVE

COPYRIGHT 2021 by PROVOST & PRITCHARD ENGINEERING GROUP, INC. ALL RIGHTS RESERVED
The firm of Provost & Pritchard Engineering Group, Inc. expressly reserves its property rights in these plans and other applicable property rights in these plans. These plans are not to be reproduced, changed, or copied in any form or manner whatsoever, nor are they to be assigned to a third party without first obtaining the written permission and consent of Provost & Pritchard Engineering Group, Inc. In the event of unauthorized reuse of these plans by a third party, Provost & Pritchard Engineering Group, Inc. and Provost & Pritchard Engineering Group, Inc. hereby expressly reserves the right to pursue all remedies at law or in equity available to it in connection with defending and enforcing these rights.

| No. | REVISION | BY | DATE |
|---|---|---|---|
| | BID ISSUE 10-12-2021 | | |

REGISTERED PROFESSIONAL ENGINEER KEVIN M. BERRYHILL No. 70415 STATE OF CALIFORNIA

DATE SIGNED: 10/12/2021

1,2,3-TCP REMOVAL PROJECT FOR
CONEJO WELLS
CAMROSA WATER DISTRICT
CAMARILLO, CA

GENERAL

PROCESS FLOW DIAGRAM

PROVOST & PRITCHARD CONSULTING GROUP
EST 1968
An Employee Owned Company
286 W. CROMWELL AVE.
FRESNO, CA 93711
559.449.2700 FAX 559.449.2715
https://provostandpritchard.com/

DESIGN ENGINEER: KEVIN BERRYHILL
LICENSE NO: 70415

DRAFTED BY: JB | CHECKED BY: RKB

DATE: 10/11/2021

JOB NO: 295820002

PROJECT NO: 295820002

PHASE:

0 1"
ORIGINAL SCALE SHOWN IS ONE INCH. ADJUST SCALE FOR REDUCED OR ENLARGED PLANS.

SHEET G-6

6 OF 54

10/12/2021 9:39 AM g:\camrosa water district-2958\295820002-camrosa gsc design project\300 CAD\340 sheet sets\01_General\G-9 PROCESS FLOW DIAGRAM.dwg -Jordan Noel

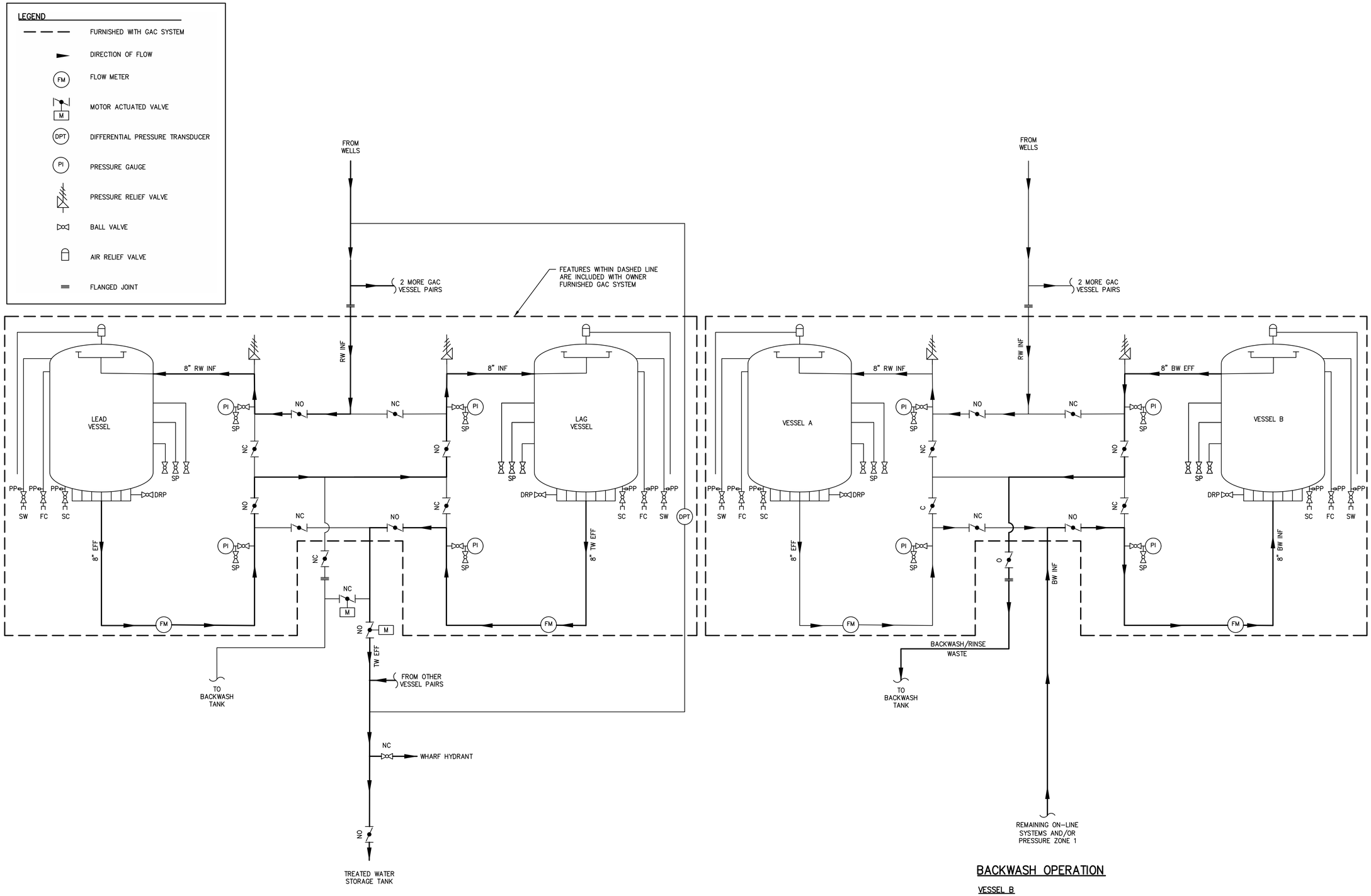


COPYRIGHT 2021 by PROVOST & PRITCHARD ENGINEERING GROUP, INC. ALL RIGHTS RESERVED
The firm of Provost & Pritchard Engineering Group, Inc. expressly reserves its common law copyright and other applicable property rights in these plans. These plans are not to be reproduced, changed, or copied in any form or manner whatsoever, nor are they to be assigned to a third party without first obtaining the written permission and consent of Provost & Pritchard Engineering Group, Inc. In the event of unauthorized reuse of these plans by a third party, the third party proceeds at its own risk and Provost & Pritchard Engineering Group, Inc. and its subconsultants shall have no liability for such unauthorized reuse, and the third party shall indemnify Provost & Pritchard Engineering Group, Inc. and its subconsultants for all claims, damages, losses, and expenses including attorney's fees arising out of or resulting therefrom. Provost & Pritchard Engineering Group, Inc. expressly reserves its common law copyright and other property rights in these plans. It is unlawful to reproduce, change, or copy these plans in any form or manner whatsoever or to assign them to any third party without first obtaining the written permission and consent of Provost & Pritchard Engineering Group, Inc. In the event of unauthorized reuse of these plans by any third party, the third party proceeds at its own risk and Provost & Pritchard Engineering Group, Inc. shall have no liability for such unauthorized reuse, and the third party shall indemnify Provost & Pritchard Engineering Group, Inc. for all claims, damages, losses, and expenses including attorney's fees arising out of or resulting therefrom. Provost & Pritchard Engineering Group, Inc. expressly reserves its common law copyright and other property rights in these plans. It is unlawful to reproduce, change, or copy these plans in any form or manner whatsoever or to assign them to any third party without first obtaining the written permission and consent of Provost & Pritchard Engineering Group, Inc. In the event of unauthorized reuse of these plans by any third party, the third party proceeds at its own risk and Provost & Pritchard Engineering Group, Inc. shall have no liability for such unauthorized reuse, and the third party shall indemnify Provost & Pritchard Engineering Group, Inc. for all claims, damages, losses, and expenses including attorney's fees arising out of or resulting therefrom. Provost & Pritchard Engineering Group, Inc. expressly reserves its common law copyright and other property rights in these plans. It is unlawful to reproduce, change, or copy these plans in any form or manner whatsoever or to assign them to any third party without first obtaining the written permission and consent of Provost & Pritchard Engineering Group, Inc. and shall hold any such third party responsible for all liability arising out of such unauthorized reuse or modification. Provost & Pritchard Engineering Group, Inc. reserves its rights to legal fees associated with defending and enforcing these rights.

BID ISSUE
10-12-2021

| No. | REVISION | BY | DATE |
|---|---|---|---|

REGISTERED PROFESSIONAL ENGINEER
KEVIN M. BERRYHILL
No. 70415
STATE OF CALIFORNIA
DATE SIGNED: 10/12/2021

1,2,3–TCP REMOVAL PROJECT FOR
CONEJO WELLS
CAMROSA WATER DISTRICT
CAMARILLO, CA

GENERAL

GAC OPERATIONAL FLOW DIAGRAM

EST. 1968
PROVOST& PRITCHARD CONSULTING GROUP
An Employee Owned Company
286 W. CROMWELL AVENUE
FRESNO, CALIFORNIA 93711
559/448-2700 FAX 559/448-2715
https://provostandpritchard.com

DESIGN ENGINEER: KEVIN BERRYHILL
LICENSE NO: 70415
DRAFTED BY: JB
CHECKED BY: RKB
DATE: 10/11/2021
JOB NO: 295820002
PROJECT NO: 295820002
PHASE:
0 1"
ORIGINAL SCALE SHOWN IS ONE INCH. ADJUST SCALE FOR REDUCED OR ENLARGED PLANS.

SHEET G-7
7 OF 54

10/12/2021 9:39 AM g:\camrosa water district–2958\295820002–camrosa gac design project\300 CAD\340 sheet sets\01_General\G–10 GAC OPERATIONAL FLOW DIAGRAM.dwg –Jordan Noel

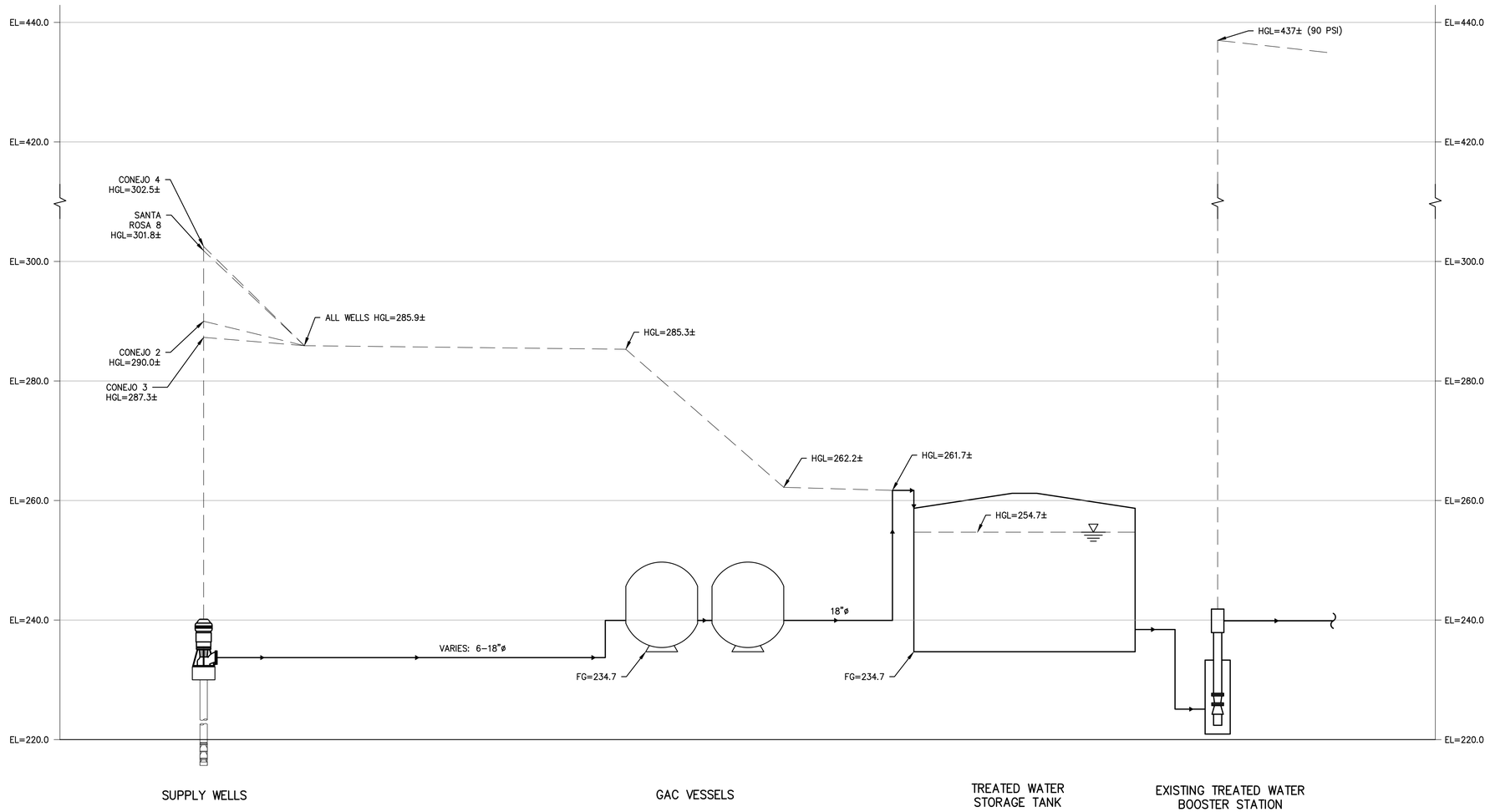


NOTES

1. 6" STEEL PIPE ASSUMED FOR WELL DISCHARGE LINES.
2. WELL PUMP HGLs INDICATED ARE MINIMUM. WELL PUMP DESIGN HEADS ARE HIGHER AND WILL BE TURNED DOWN USING VFDs.

TREATMENT HYDRAULIC PROFILE

COPYRIGHT 2021 by PROVOST & PRITCHARD ENGINEERING GROUP, INC. ALL RIGHTS RESERVED
The firm of Provost & Pritchard Engineering Group, Inc. expressly reserves its common law copyright and other applicable property rights in these plans. These plans are not to be reproduced, changed, or copied in any form or manner whatsoever, nor are they to be assigned to a third party without first obtaining the written permission and consent of Provost & Pritchard Engineering Group, Inc. In the event of unauthorized reuse of these plans by a third party, the third party shall hold the firm of Provost & Pritchard Engineering Group, Inc. harmless, and shall bear the cost of Provost & Pritchard Engineering Group, Inc.'s legal fees associated with defending and enforcing these rights.

BID ISSUE
10-12-2021

| No. | REVISION | BY | DATE |
|---|---|---|---|

REGISTERED PROFESSIONAL ENGINEER
R. KEVIN BERRYHILL
No. 70415
STATE OF CALIFORNIA

DATE SIGNED: 10/12/2021

1,2,3-TCP REMOVAL PROJECT FOR
CONEJO WELLS
CAMROSA WATER DISTRICT
CAMARILLO, CA

GENERAL

TREATMENT HYDRAULIC PROFILE

EST. 1968
PROVOST & PRITCHARD
CONSULTING GROUP
An Employee Owned Company
455 W FIR AVENUE
CLOVIS, CALIFORNIA 93611
559/449-2700 FAX 559/449-2715
https://provostandpritchard.com/

DESIGN ENGINEER: KEVIN BERRYHILL
LICENSE NO: 70415
DRAFTED BY: JB
CHECKED BY: RKB
DATE: 10/11/2021
JOB NO: 295820002
PROJECT NO: 295820002
PHASE:
0 1"
ORIGINAL SCALE SHOWN IS ONE INCH. ADJUST SCALE FOR REDUCED OR ENLARGED PLANS.

SHEET G-8



10/12/2021 9:40 AM g:\camrosa water district-2958\295820002-camrosa gac design project\300 CAD\340 sheet sets\01_General\G-11 TREATMENT HYDRAULIC PROFILE.dwg -Jordan Noel

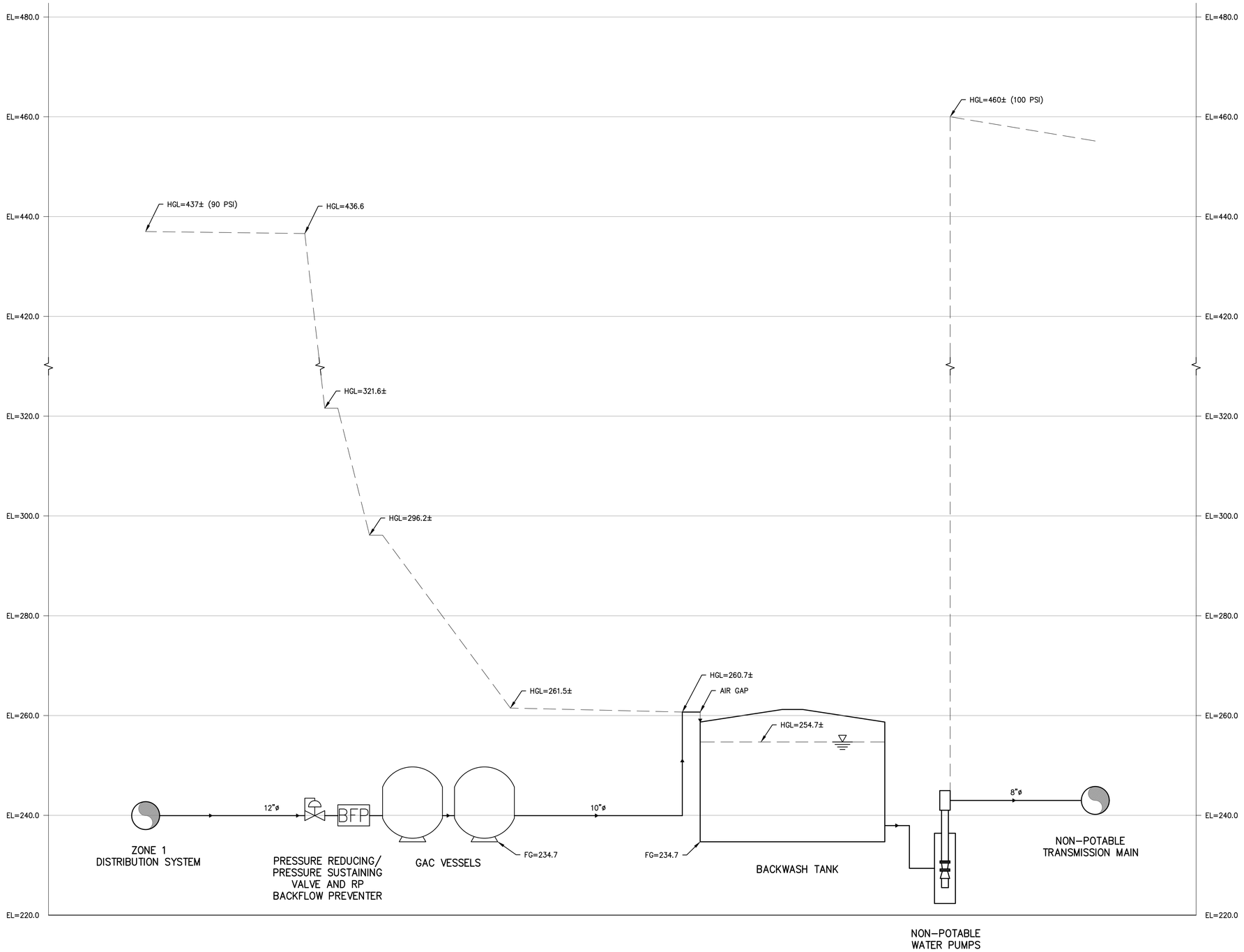


BACKWASH HYDRAULIC PROFILE

COPYRIGHT 2021 by PROVOST & PRITCHARD ENGINEERING GROUP, INC. ALL RIGHTS RESERVED
The firm of Provost & Pritchard Engineering Group, Inc. expressly reserves its common law copyright and other applicable property rights in these plans. These plans are not to be reproduced, changed, or copied in any form or manner whatsoever, nor are they to be assigned to a third party without first obtaining the written permission and consent of Provost & Pritchard Engineering Group, Inc. In the event of unauthorized reuse of these plans by a third party, the third party shall hold the firm of Provost & Pritchard Engineering Group, Inc. harmless, and shall bear the cost of Provost & Pritchard Engineering Group, Inc.'s legal fees associated with defending and enforcing these rights.

BID ISSUE
10-12-2021

| No. | REVISION | BY | DATE |
|---|---|---|---|

REGISTERED PROFESSIONAL ENGINEER
R. KEVIN BERRYHILL
No. 70415
STATE OF CALIFORNIA

DATE SIGNED: 10/12/2021

1,2,3-TCP REMOVAL PROJECT FOR
CONEJO WELLS
CAMROSA WATER DISTRICT
CAMARILLO, CA

GENERAL

BACKWASH HYDRAULIC PROFILE

EST. 1968
PROVOST & PRITCHARD
CONSULTING GROUP
An Employee Owned Company
455 W FIR AVENUE
CLOVIS, CALIFORNIA 93611
559/449-2700 FAX 559/449-2715
https://provostandpritchard.com/

DESIGN ENGINEER: KEVIN BERRYHILL
LICENSE NO: 70415

| DRAFTED BY: | CHECKED BY: |
|---|---|
| JB | RKB |

DATE: 10/11/2021
JOB NO: 295820002
PROJECT NO: 295820002
PHASE:

0 1"
ORIGINAL SCALE SHOWN IS ONE INCH. ADJUST SCALE FOR REDUCED OR ENLARGED PLANS.

SHEET G-9



10/12/2021 9:40 AM g:\camrosa water district-2958\295820002-camrosa gac design project\300 CAD\340 sheet sets\01_General\G-12 BACKWASH HYDRAULIC PROFILE.dwg -Jordan Noel

| POINT TABLE | | |
|---|---|---|
| POINT # | NORTHING | EASTING |
| 7 | 268535.42 | 1718979.93 |
| 8 | 268891.59 | 1718983.30 |
| 9 | 268920.03 | 1719175.58 |
| 10 | 268318.65 | 1719169.89 |
| 11 | 268236.68 | 1719027.14 |
| 12 | 268766.83 | 1718982.49 |
| 13 | 268766.83 | 1719174.13 |

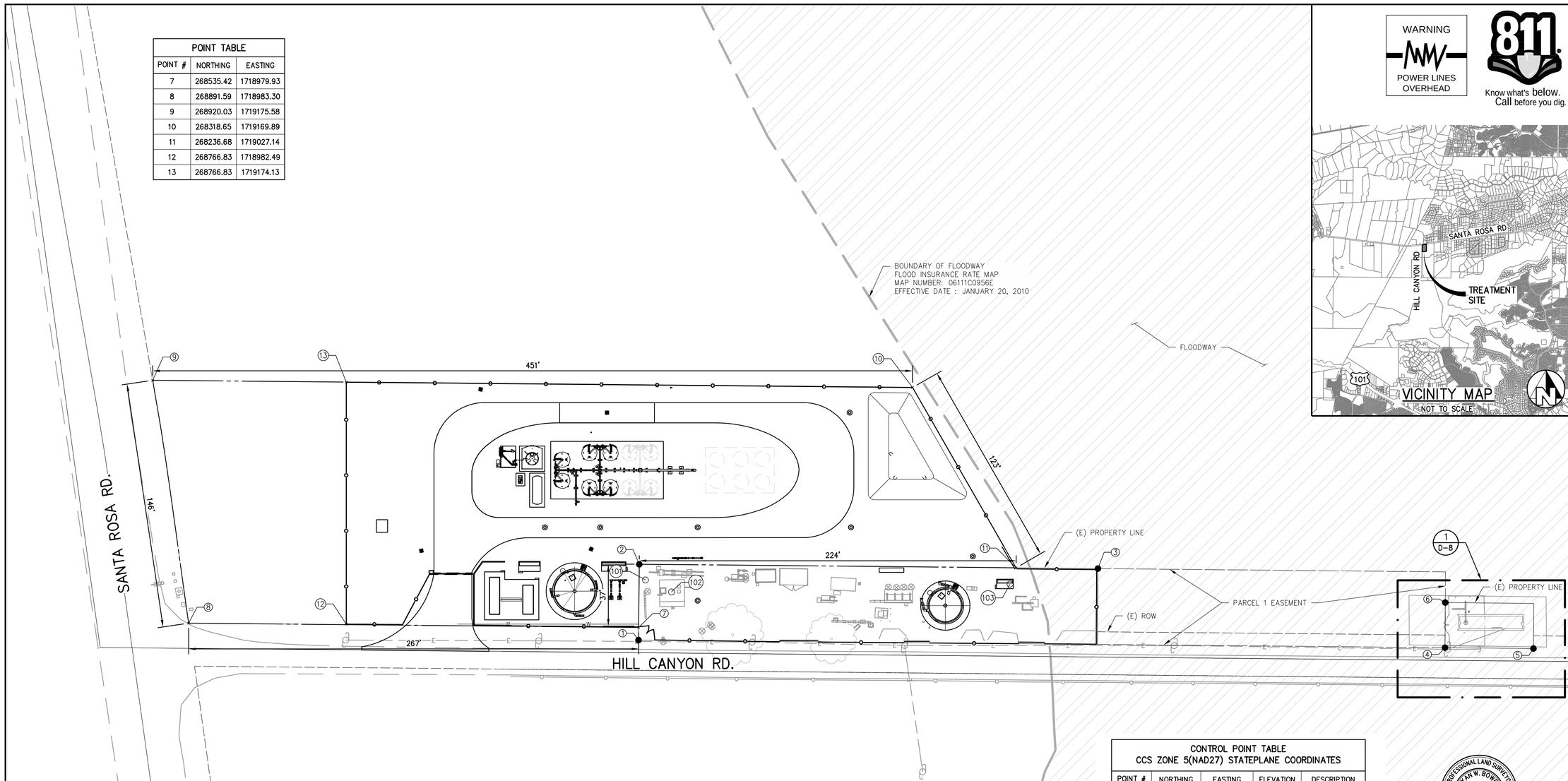


| CONTROL POINT TABLE<br>CCS ZONE 5(NAD27) STATEPLANE COORDINATES | | | | |
|---|---|---|---|---|
| POINT # | NORTHING | EASTING | ELEVATION | DESCRIPTION |
| 1 | 268535.52 | 1718969.93 | N/A | FD IP |
| 2 | 268534.93 | 1719029.95 | N/A | FD IP |
| 3 | 268171.92 | 1719026.53 | N/A | FD IP |
| 4 | 267897.26 | 1718963.96 | N/A | FD IP |
| 5 | 267827.27 | 1718963.23 | N/A | FD IP |
| 6 | 267897.05 | 1718999.61 | N/A | FD IP |
| 101 | 268530.00 | 1719017.49 | 230.48 | SET SPIKE |
| 102 | 268509.38 | 1719008.04 | 231.12 | SET MAG NAIL |
| 103 | 268241.57 | 1719014.21 | 231.49 | SET SPIKE |

## TOPOGRAPHY NOTE

TOPOGRAPHY SHOWN WAS COLLECTED BY PROVOST & PRITCHARD CONSULTING GROUP DURING A FIELD SURVEY CONDUCTED IN JULY OF 2020.

## BOUNDARY NOTE

THE BOUNDARY/EASEMENT INFORMATION SHOWN ON THESE PLANS IS BASED UPON RECORD INFORMATION TIED TO PHYSICAL MONUMENTS, AND WAS PREPARED UNDER THE DIRECTION OF BRYAN W. BOWERS, PLS 8469.

PROFESSIONAL LAND SURVEYOR
BRYAN W. BOWERS
No. 8469
STATE OF CALIFORNIA

DATE SIGNED: _____

SCALE IN FEET
0 20 40 80

WARNING
POWER LINES OVERHEAD

811
Know what's below.
Call before you dig.

COPYRIGHT 2021 by PROVOST & PRITCHARD ENGINEERING GROUP, INC. ALL RIGHTS RESERVED
The firm of Provost & Pritchard Engineering Group, Inc. (authors of these plans) expressly reserves its common law copyright and other applicable property rights in these plans. These plans are not to be reproduced, changed, or copied in any form or manner whatsoever, nor are they to be assigned to a third party without first obtaining the expressed written permission and consent of Provost & Pritchard Engineering Group, Inc. In the event of unauthorized reuse of these plans by a third party, Provost & Pritchard Engineering Group, Inc. shall be indemnified, held harmless, and shall receive compensation from third party for any and all claims, damages, losses, and expenses including attorney's fees associated with defending and enforcing these rights.




| No. | REVISION | BY | DATE |
|---|---|---|---|

BID ISSUE
10-12-2021

REGISTERED PROFESSIONAL ENGINEER
KEVIN BERRYHILL
No. 70415
STATE OF CALIFORNIA

DATE SIGNED: 10/12/2021

1,2,3-TCP REMOVAL PROJECT FOR
CONEJO WELLS
CAMROSA WATER DISTRICT
CAMARILLO, CA

CIVIL
HORIZONTAL AND VERTICAL CONTROL PLAN

EST. 1968
PROVOST & PRITCHARD CONSULTING GROUP
An Employee Owned Company
286 W. CROMWELL AVENUE
FRESNO, CALIFORNIA 93711
559.449.2700 FAX 559.449.2715
https://provostandpritchard.com/

DESIGN ENGINEER: KEVIN BERRYHILL
LICENSE NO: 70415

| DRAFTED BY: | CHECKED BY: |
|---|---|
| JB | RKB |

DATE: 10/11/2021
JOB NO: 295820002
PROJECT NO: 295820002
PHASE:

0 1"
ORIGINAL SCALE SHOWN IS ONE INCH. ADJUST SCALE FOR REDUCED OR ENLARGED PLANS.

SHEET C-1
10 OF 54

10/12/2021 9:33 AM G:\Camrosa Water District-2958\295820002-Camrosa GAC Design Project\300 CAD\340 Sheet Sets\02_Plans_Maps\C-1 HORIZONTAL AND VERTICAL CONTROL PLAN.dwg —Jennifer Bonilla

## DEMOLITION CALLOUTS

1. REMOVE AND DISPOSE OF (E) STORAGE TANK, RINGWALL FOUNDATION, AND ALL RELATED APPURTENANCES
2. REMOVE AND DISPOSE OF (E) ELECTRICAL EQUIPMENT AND FOUNDATION
3. REMOVE AND DISPOSE OF (E) CHAIN LINK FENCE
4. UPGRADE ALL FOUR WELL PUMPS AND MOTORS. REFER TO SPECIFICATION 43 21 52
5. REMOVE ANTENNA, PRESSURE TRANSDUCERS, SAMPLE LINES, AND CHEMICAL INJECTION LINES FROM EXISTING TANK AND REPLACE IN-KIND WITH NEW EQUIPMENT ON NEW TANK
6. REMOVE AND DISPOSE OF (E) ENTRANCE GATES AND REPLACE IN-KIND
7. REMOVE AND DISPOSE OF (E) SHRUBS

## EXISTING TOPOGRAPHY CALLOUTS

- A (E) OVERHEAD ELECTRICAL
- B (E) ELECTRIC POLE
- C (E) FENCE
- D (E) CONEJO WELL 2
- E (E) CONEJO WELL 3
- F (E) CONEJO WELL 4
- G (E) CWD BLENDING STATION
- H (E) TREATED WATER STORAGE TANK
- I (E) CONEJO ZONE 1 BOOSTER PUMPS
- J (E) CHEMICAL STORAGE ENCLOSURE
- K (E) CHEMICAL FEED BUILDING
- L (E) PRIMARY SWITCHGEAR
- M (E) GENERATOR PAD
- N (E) TRANSFORMER
- O (E) ELECTRICAL PANEL
- P (E) 6" PVC PIPE
- Q (E) 8" PVC PIPE
- R (E) BACKFLOW PREVENTER SERVING COUNTY PARK TO SOUTH

## EXISTING PIPELINES

- DW — DRAIN WATER
- Z1W — ZONE 1 TRANSMISSION MAIN
- NPW — NON-POTABLE WATER
- WL — WASTE LOOP
- WD — WELL DISCHARGE
- Z2W — ZONE 2 TRANSMISSION MAIN
- WTD — WASTE TO DITCH
- IW — IMPORTED WATER (CALLEGUAS WATER)

WARNING
POWER LINES OVERHEAD

811 Know what's below. Call before you dig.

## LEGEND

- (APPROXIMATE LIMITS OF AREA TO BE DEMOLISHED)
- (APPROXIMATE LOCATION TO DEMOLISH UTILITY OR FENCE)
- SAWCUT LINE

BOUNDARY OF FLOODWAY

## NOTES

1. DEMOLITION TO BE COORDINATED WITH CAMROSA WATER DISTRICT.
2. EXISTING BURIED UTILITIES ARE SHOWN AT APPROXIMATE LOCATIONS. THE CONTRACTOR SHALL EXPOSE UTILITIES TO DETERMINE EXACT LOCATIONS AS A FIRST ORDER OF WORK, PRIOR TO DEMOLITION.
3. ALL EQUIPMENT AND MATERIALS TO BE REMOVED AND/OR DEMOLISHED SHALL BE DISPOSED OF OFFSITE BY THE CONTRACTOR AFTER REVIEW BY DISTRICT STAFF FOR REUSE.
4. ANY SURFACING THAT IS DISTURBED OUTSIDE THE LIMITS SHOWN SHALL BE REMOVED AND REPLACED.
5. THE CONTRACTOR SHALL BACKFILL AND COMPACT VOIDS, HOLES, AND UNEVEN GROUND RESULTING FROM DEMOLITION WITH ENGINEERED FILL IN CONFORMANCE WITH THE TRENCH BACKFILL DETAILS AND THE SPECIFICATIONS. FINISH SURFACING SHALL BE PLACED AS SPECIFIED ON THE GRADING PLANS.
6. PROVIDE PERMANENT OR TEMPORARY FENCING ALONG ADJOINING PROPERTIES AT ALL TIMES.
7. EXISTING FEATURES NOT CALLED TO BE DEMOLISHED SHALL BE PROTECTED IN PLACE UNLESS OTHERWISE DIRECTED BY ENGINEER.

HILL CANYON RD.

(E) SANTA ROSA WELL 8 200 FEET

SAWCUT LINE

SCALE IN FEET
0 10 20 40

COPYRIGHT 2021 by PROVOST & PRITCHARD ENGINEERING GROUP, INC. ALL RIGHTS RESERVED
The firm of Provost & Pritchard Engineering Group, Inc. expressly reserves its common law copyright and other applicable property rights in these plans. These plans are not to be reproduced, changed, or copied in any form or manner whatsoever, nor are they to be assigned to a third party without first obtaining the expressed written permission and consent of Provost & Pritchard Engineering Group, Inc. In the event of unauthorized reuse of these plans by a third party, Provost & Pritchard Engineering Group, Inc. and its Principals and Employees shall be held harmless, and shall be indemnified by the third party user. Provost & Pritchard Engineering Group, Inc. shall have legal fees associated with defending and enforcing these rights.

BID ISSUE
10-12-2021

| No. | REVISION | BY | DATE |
|---|---|---|---|

REGISTERED PROFESSIONAL ENGINEER KEVIN M. BERRYHILL No. 70415 STATE OF CALIFORNIA
DATE SIGNED: 10/12/2021

1,2,3-TCP REMOVAL PROJECT FOR
CONEJO WELLS
CAMROSA WATER DISTRICT
CAMARILLO, CA

CIVIL

DEMOLITION PLAN

EST. 1968 PROVOST& PRITCHARD CONSULTING GROUP
An Employee Owned Company
1000 TOWN CENTER DRIVE, SUITE 150
OXNARD, CA 93036-1211
559/448-2700 FAX 559/448-2715
https://provostandpritchard.com/

DESIGN ENGINEER: KEVIN BERRYHILL
LICENSE NO: 70415

| DRAFTED BY: | CHECKED BY: |
|---|---|
| JB | RKB |

DATE: 10/11/2021
JOB NO: 295820002
PROJECT NO: 295820002
PHASE:

0 1"
ORIGINAL SCALE SHOWN IS ONE INCH. ADJUST SCALE FOR REDUCED OR ENLARGED PLANS.

SHEET C-2
11 OF 54

10/12/2021 9:36 AM G:\Camrosa Water District-2958\295820002-Camrosa CAC Design Project\300 CAD\340 Sheet Sets\02_Plans_Maps\C-2 DEMOLITION PLAN.dwg -- Jennifer Bonilla

## NOTES

1. SITE UTILITY LINES NOT SHOWN FOR CLARITY, REFER TO SITE PIPING PLAN.
2. CONTRACTOR MAY USE ANY PORTION OF THE SITE WITHIN THE FINAL PROPERTY LINE AS A STAGING AREA.
3. REFER TO THE GRADING SHEET FOR ONSITE SURFACE FINISHING.
4. CONTRACTOR TO INCLUDE 20 BOLLARDS (DETAIL 3, SHEET D-8) AT LOCATIONS TO BE SELECTED BY THE OWNER.

## SITE LEGEND

1. GAC VESSELS (SEE DETAIL 1, SHEET D-2)
2. GAC VESSEL PAD (SEE DETAIL 1, SHEET D-1)
3. CONCRETE TRUCK PAD (SEE DETAIL 10, SHEET D-21)
4. 85,000-GALLON BOLTED STEEL TREATED WATER STORAGE TANK (SEE DETAIL 1, SHEET D-13)
5. 126,000-GALLON BOLTED STEEL BACKWASH TANK (SEE DETAIL 1, SHEET D-12)
6. ANALYZER BUILDING (SEE DETAIL 1, SHEET D-9)
7. SODIUM HYDROXIDE ENCLOSURE (SEE DETAIL 1, SHEET D-11)
8. CARBON DIOXIDE STORAGE AND FEED PANEL (SEE DETAIL 1, SHEET D-17)
9. GRATED DROP INLET (SEE DETAIL 2, SHEET D-6)
10. STORM BASIN
11. NON-POTABLE PUMP STATION (SEE DETAIL 1, SHEET D-16)
12. MOTOR CONTROL CENTER (SEE ELECTRICAL PLANS)
13. DOUBLE, 16' WIDE SWING GATE (SEE DETAIL 3, SHEET D-7)
14. 30' WIDE DOUBLE SWING GATE (SEE DETAIL 3, SHEET D-7)
15. FUTURE GAC VESSELS (NIC)
16. CHAIN LINK FENCE (SEE DETAIL 1, SHEET D-7)
17. DRAINAGE BASIN OUTFALL (SEE DETAIL 4, SHEET D-6)
18. HMA PAVEMENT (SEE DETAIL 7, SHEET D-6)
19. STORM DRAIN MANHOLE (SEE DETAIL 6, SHEET D-6)
20. 30' ENTRANCE AUTOMATIC CANTILEVER SLIDE GATE (SEE DETAIL 5, SHEET D-7)
21. 12,000-GALLON FUEL TANK (SEE ELECTRICAL PLANS)
22. EMERGENCY GENERATOR (SEE ELECTRICAL PLANS)
23. TRANSFORMER (SEE ELECTRICAL PLANS)
24. MAIN SWITCHBOARD (SEE ELECTRICAL PLANS)
25. IEM-INTEGRAL POWER CENTER (SEE ELECTRICAL PLANS)
26. 20' WIDE SLIDE GATE (SEE DETAIL 8, SHEET D-6)
27. REDUCED PRESSURE BACKFLOW PREVENTER (SEE DETAIL 2, SHEET D-2)
28. RETAINING WALL (SEE DETAIL 6, SHEET D-21)
29. TWO CHANNEL 2.25" LINE BACKER CABLE PROTECTOR, OR EQAUL

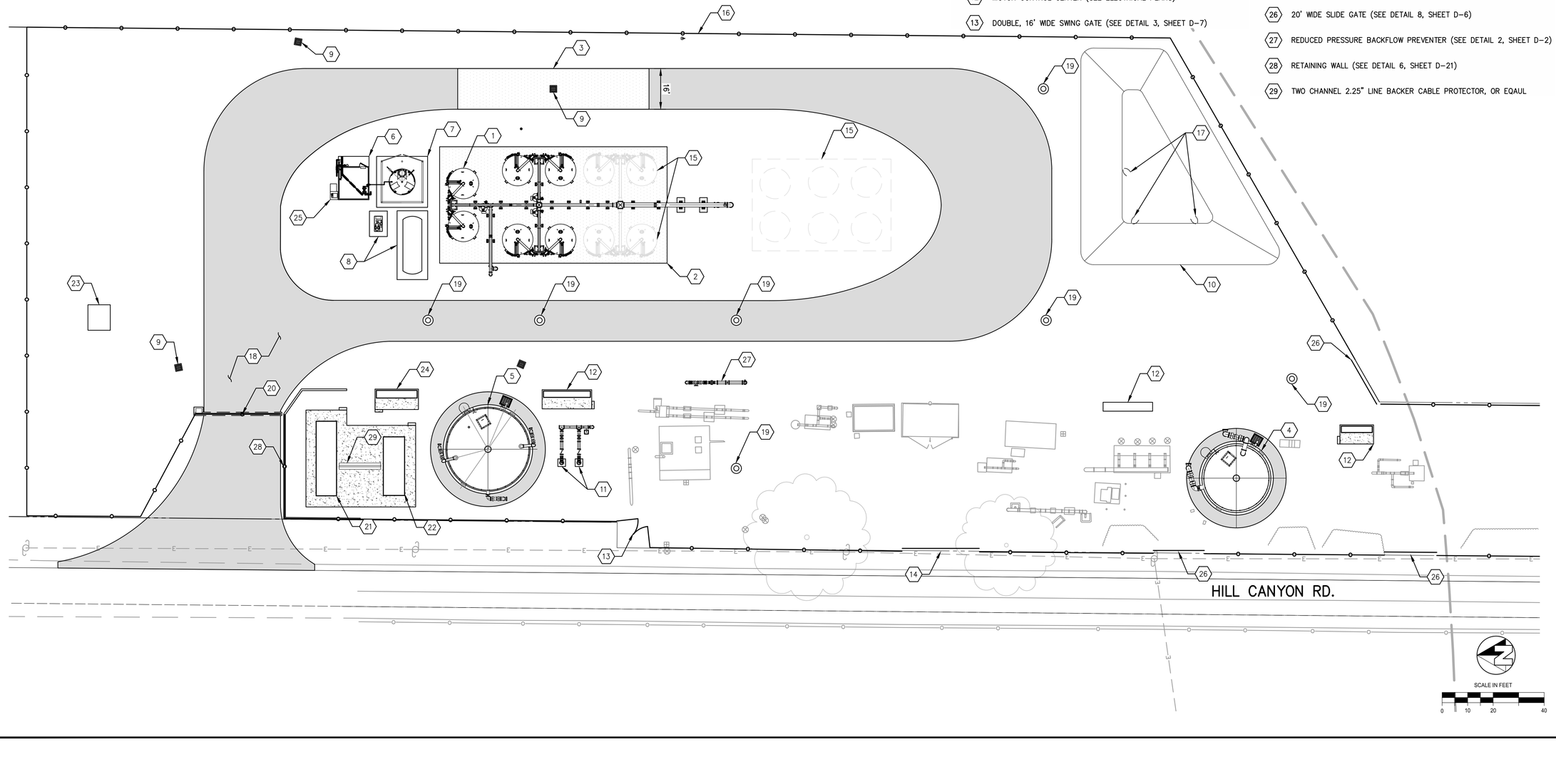


COPYRIGHT 2021 by PROVOST & PRITCHARD ENGINEERING GROUP, INC. ALL RIGHTS RESERVED
The firm of Provost & Pritchard Engineering Group, Inc. expressly reserves its common law copyright and other applicable property rights in these plans. These plans are not to be reproduced, changed, or copied in any form or manner whatsoever, nor are they to be assigned to a third party without first obtaining the written permission and consent of Provost & Pritchard Engineering Group, Inc. In the event of unauthorized reuse of these plans by a third party, the third party shall hold the firm of Provost & Pritchard Engineering Group, Inc. harmless, and shall bear the cost of Provost & Pritchard Engineering Group, Inc.'s legal fees associated with defending and enforcing these rights.

BID ISSUE
10-12-2021

| No. | REVISION | BY | DATE |
|---|---|---|---|

REGISTERED PROFESSIONAL ENGINEER
R. KEVIN BERRYHILL
No. 70415
CIVIL
STATE OF CALIFORNIA

DATE SIGNED: 10/12/2021

1,2,3-TCP REMOVAL PROJECT FOR
CONEJO WELLS
CAMROSA WATER DISTRICT
CAMARILLO, CA

CIVIL

SITE PLAN

EST. 1968
PROVOST & PRITCHARD
CONSULTING GROUP
An Employee Owned Company
455 W FIR AVENUE
CLOVIS, CALIFORNIA 93611
559449-2700 FAX 559449-2715
https://provostandpritchard.com/

DESIGN ENGINEER: KEVIN BERRYHILL
LICENSE NO: 70415
DRAFTED BY: JB
CHECKED BY: RKB
DATE: 10/11/2021
JOB NO: 295820002
PROJECT NO: 295820002
PHASE:
0 1"
ORIGINAL SCALE SHOWN IS ONE INCH. ADJUST SCALE FOR REDUCED OR ENLARGED PLANS.
SHEET C-3



10/12/2021 9:49 AM g:\camrosa water district-2958\295820002-camrosa gac design project\300 CAD\340 sheet sets\02_Plans_Maps\C-3 SITE PLAN.dwg -Jordan Noel

## LEGEND

| | |
|---|---|
| → | DIRECTION OF SURFACE FLOW |
| —o— | CHAIN LINK FENCE PER SHEET D–7 |
| ═══ | RETAINING WALL PER SHEET D–21, DETAIL 6 |
| | CONSTRUCT CONCRETE PAD, SIDEWALK, OR FOUNDATION. SEE STRUCTURAL DETAILS |
| | CONSTRUCT ASPHALT PAVEMENT PER DETAIL 7, SHEET D–6 |
| | CONSTRUCT CONCRETE WALKWAY PER SHEET D–23 |

| | |
|---|---|
| AC | ASPHALT CONCRETE |
| C | CONCRETE |
| EG | EXISTING GROUND |
| (E) | EXISTING |
| FG | FINISHED GRADE |
| FL | FLOW LINE |
| GB | GRADE BREAK |
| INV | INVERT OF PIPE |
| TC | TOP OF CONCRETE |
| TG | TOP OF GRATE |
| TOP | TOP OF SLOPE |
| TOE | TOE OF SLOPE |
| TW | TOP OF WALL |

| CUT AND FILL SUMMARY | |
|---|---|
| TOTAL CUT, CU. YD. | 950 |
| TOTAL FILL, CU. YD. | 4,485 |
| NET IMPORT, CU. YD | 3,535 |

NOTE: GRADING QUANTITIES ARE SHOWN FOR PERMIT PURPOSES ONLY. THE CONTRACTOR IS RESPONSIBLE FOR THE FINAL BID QUANTITIES. 'R' VALUE FOR IMPORT BORROW TO BE 50 OR ABOVE.

## NOTES

1. SITE UTILITY LINES NOT SHOWN FOR CLARITY, REFER TO SITE PIPING PLAN.
2. CONTRACTOR MAY USE ANY PORTION OF THE SITE WITHIN PROPERTY LINE AS A STAGING AREA.
3. THE OVERALL BUILDING SITE SHALL HAVE A MINIMUM SLOPE OF 0.5% IN ALL AREAS TO AN APPROVED DRAINAGE FACILITY.
4. FEMA FLOODZONE AE WITH BFE=233.7 PER FEMA MAP #06111C0956E, EFFECTIVE 01/20/2010
5. UNLESS OTHERWISE NOTED, ALL SURFACES WITHIN PROJECT FENCE LINE SHALL BE SURFACED WITH 3" OF 3/4" CRUSHED ROCK COMPACTED TO 85% RELATIVE COMPACTION.
6. REFER TO SHEET D–23 FOR EQUIPMENT FOUNDATION/ WALKWAY DETAILS.

REGULATORY FLOODWAY ZONE AF
ZONE AE, BFE = 233.7

PIPELINE EASEMENT

PIPELINE EASEMENT

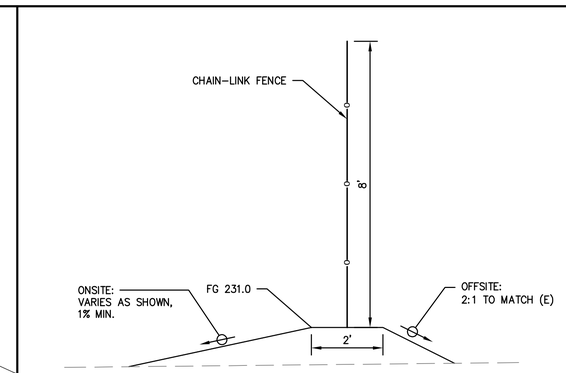


1 / C–4 GRADING AT FENCE SECTION VIEW (TYP)

1 / C–4

TG 229.15 · FG 231.00 · FL 229.84 · FL 229.20 · TG 229.00 · TG 231.80 · TG 229.50 · TG 230.00 · TG 231.51 · TG 231.76 · TG 230.11

AC 230.50 · AC 231.00 · AC 231.50 · AC 232.00 · AC 230.00 · AC 231.10 · AC 233.80 · AC 230.48± MATCH (E) · AC 230.36± MATCH (E)

C 232.00 · C 234.70 · C 234.93

FG 234.20 · FF=234.7 · FG 233.70 · FG 230.0± MATCH (E) · FG 230.6± MATCH (E) · FG 230.5± MATCH (E)

FL 229.50 · FL 230.30 · FL 229.70

TOE 229.1± MATCH (E) · TOE 230.3± MATCH (E) · TOE 230.7± MATCH (E) · TOE 231.6± MATCH (E) · TOE 231.4± MATCH (E)

TOP 234.70 · TOP 233.20 · TOP 228.90 · TOP 234.50

INV 12" 223.50 (NE) · INV 12" 223.50 (NW) · INV 12" 223.50 (SW) · TOE 223.50

TW 233.95 END WALL · TW 233.95 BEG. WALL

0.5% · 0.6% · 3.3% · 2.3% · 1.2% · 3.0% · 2.6% · 1.0% · 2.0%

TRANSFORMER

MAIN SWITCH BOARD

GENERATOR SLAB · GENERATOR SLAB · ISOLATION JOINT

GAC VESSEL SLAB

TANK SLAB PAD 234.7 · TANK SLAB PAD 234.7

MCC 234.7 · MCC 234.7

CHEMICAL

PROTECT (E) UTILITY POLE IN PLACE; DO NOT PLACE MORE THAN 0.5' OF FILL AT BASE OF POLE

HILL CANYON ROAD

SCALE IN FEET
0 10 20 40

COPYRIGHT 2021 by PROVOST & PRITCHARD ENGINEERING GROUP, INC. ALL RIGHTS RESERVED
The firm of Provost & Pritchard Engineering Group, Inc. expressly reserves its property rights in these plans and other applicable property rights in these plans. These plans are not to be reproduced, changed, or copied in any form or manner whatsoever, nor are they to be assigned to a third party without first obtaining the written permission and consent of Provost & Pritchard Engineering Group, Inc. In the event of unauthorized reuse of these plans by a third party, the third party agrees to hold Provost & Pritchard Engineering Group, Inc. harmless, and shall indemnify Provost & Pritchard Engineering Group, Inc. for all loss, liability, damages and costs, including legal fees associated with defending and enforcing these rights.

BID ISSUE
10-12-2021

| No. | REVISION | BY | DATE |
|---|---|---|---|

REGISTERED PROFESSIONAL ENGINEER · KEVIN M. BERRYHILL · No. 70415 · STATE OF CALIFORNIA
DATE SIGNED: 10/12/2021

1,2,3–TCP REMOVAL PROJECT FOR
CONEJO WELLS
CAMROSA WATER DISTRICT
CAMARILLO, CA

CIVIL

GRADING PLAN

PROVOST & PRITCHARD CONSULTING GROUP
EST. 1966
An Employee Owned Company
286 E. COTATI AVENUE
CLOVIS, CA 93611
559/449-2700 FAX 559/449-2715
https://provostandpritchard.com

DESIGN ENGINEER: KEVIN BERRYHILL
LICENSE NO: 70415
DRAFTED BY: JB | CHECKED BY: RKB
DATE: 10/11/2021
JOB NO: 295820002
PROJECT NO: 295820002
PHASE:

0 1"
ORIGINAL SCALE SHOWN IS ONE INCH. ADJUST SCALE FOR REDUCED OR ENLARGED PLANS.

SHEET C-4
13 OF 54

10/12/2021 9:42 AM G:\Camrosa Water District–295820002–Camrosa GAC Design Project\300 CAD\340 Sheet Sets\02_Plans_Mays\C–4 GRADING PLAN.dwg –Jennifer Bonilla

| PIPING LEGEND | | | |
|---|---|---|---|
| No. | PIPE | MATERIAL | COMMENT |
| 1 | 18" | DUCTILE IRON PIPE | RAW WATER FROM CONJEO WELLS 2, 3, 4 AND SANTA ROSA 8 |
| 2 | 18" | DUCTILE IRON PIPE | TREATED WATER |
| 3 | 10" | DUCTILE IRON PIPE | BACKWASH TO TANK |
| 4 | 12" | DUCTILE IRON PIPE | BACKWASH SUPPLY FROM ZONE 1 |
| 5 | 12" | SDR 35 PVC | STORM DRAIN |
| 6 | 10" | DIP | BACKWASH RECLAIM TO NON-POTABLE SYSTEM |
| 7 | 2" | PVC ELECTRICAL CONDUIT W/ SWEEP ELBOWS | ANALYZER SAMPLE LINE WITH 1/2" OD TUBING |
| 8 | 2" | PVC ELECTRICAL CONDUIT W/ SWEEP ELBOWS | SODIUM HYDROXIDE FEED WITH 1/2" OD TUBING |
| 9 | 1-1/2" | COPPER K SOFT COATED TUBE BLUE | SHOWER/EYE WASH STATION LINE |
| 10 | 2" | SCH 40 STAINLESS STEEL | WATER SUPPLY TO CARBON DIOXIDE SKID |
| 11 | 2" | SCH 40 STAINLESS STEEL | CARBONIC ACID SOLUTION LINE |
| 12 | 4" | SDR 35 PVC | ANALYZER DRAIN |
| 13 | 12" | DIP | BACKWASH RECLAIM TO NON-POTABLE SYSTEM |
| 14 | 2" | PVC CONDUIT W/SWEEP ELBOWS | SODIUM HYDROXIDE PUMP SUCTION 3/4" TUBING |
| 15 | 10" | DIP | WASTE LOOP TO BACKWASH TANK |
| 16 | 6" | DIP | WASTE TO DITCH CONNECTION TO BACKWASH TANK |

| POTHOLING INFORMATION | | | |
|---|---|---|---|
| X | PIPE | MATERIAL | DEPTH |
| A | 6" | STEEL | 5'2"± |
| B | 24" | STEEL | 7'2"± |
| C | 16" | STEEL | 4'± |
| D | 12" | PVC C905 | 7'6"± |
| E | 8" | PVC C905 | 4'5"± |
| F | 16" | PVC C905 | 6'11"± |
| G | 12" | UNK | 4'1"± |
| H | 12" | UNK | 3'10" |
| I | 12" | PVC | 7'1" |

SEE NOTE 5

## NOTES

1. ABOVE GROUND PIPE TO BE COATED PER 09 90 00.
2. ABOVE GROUND MANIFOLD PIPING SHALL BE CEMENT MORTAR LINED DUCTILE IRON PIPE AND FITTINGS OR FUSION BONDED EPOXY LINED AND COATED WELDED STEEL PIPE AND FABRICATED STEEL SPECIALS PER SPECIFICATIONS.
3. ALL JOINTS IN ABOVE GROUND MANIFOLD PIPING SHALL BE FLANGED OR GROOVED EXCEPT AS OTHERWISE INDICATED.
4. ALL PRESSURE PIPE MUST BE INSTALLED WITH RESTRAINED JOINTS.
5. CONTRACTOR TO VERIFY ELEVATION OF EXISTING PIPE AND ADJUST FITTINGS AS NECESSARY.
6. POINT OF CONNECTION TO OWNER-CONSTRUCTED PIPE EXTENSION. THE OWNER HAS ALREADY CONSTRUCTED UPSTREAM PIPE UP TO MJ CAP WHERE INDICATED.
7. CONTRACTOR TO REOMVE (E) ELBOW AND INSTALL 8" TEE, TWO GATE VALVES AND 10"X8" REDUCER.

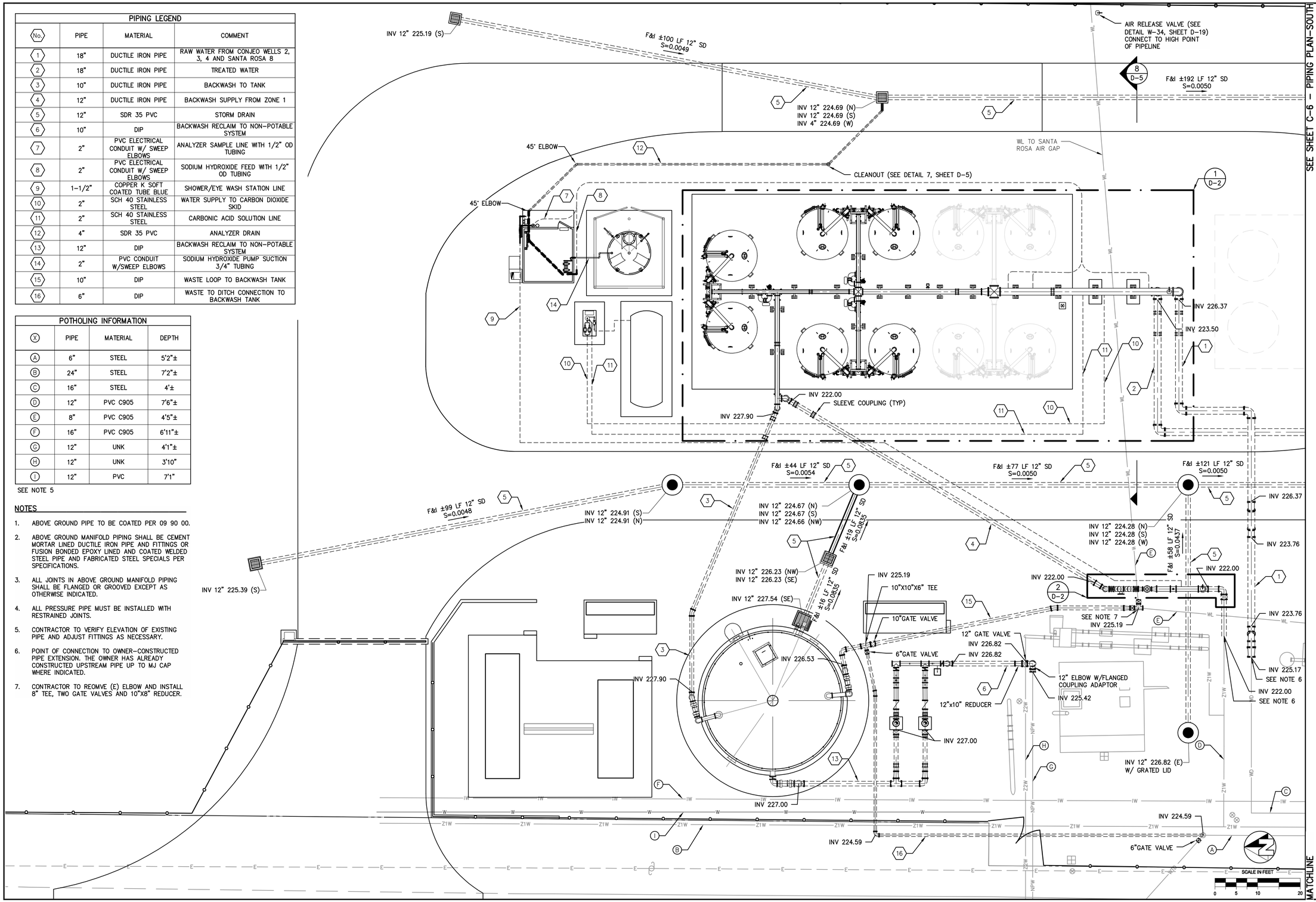


COPYRIGHT 2021 by PROVOST & PRITCHARD ENGINEERING GROUP, INC. ALL RIGHTS RESERVED
The firm of Provost & Pritchard Engineering Group, Inc. expressly reserves its common law copyright and other applicable property rights in these plans. These plans are not to be reproduced, changed, or copied in any form or manner whatsoever, nor are they to be assigned to a third party without first obtaining the written permission and consent of Provost & Pritchard Engineering Group, Inc. In the event of unauthorized reuse of these plans by a third party, Provost & Pritchard Engineering Group, Inc. and Provost & Pritchard Engineering Group, Inc. hereby, and shall require such third party to, fully indemnify, defend and hold Provost & Pritchard Engineering Group, Inc. harmless from any liability, claims, or losses associated with offending and enforcing these rights.

BID ISSUE
10-12-2021

| No. | REVISION | BY | DATE |
|---|---|---|---|

REGISTERED PROFESSIONAL ENGINEER KEVIN M. BERRYHILL No. 70415 STATE OF CALIFORNIA
DATE SIGNED: 10/12/2021

1,2,3-TCP REMOVAL PROJECT FOR
CONEJO WELLS
CAMROSA WATER DISTRICT
CAMARILLO, CA

CIVIL

PIPING PLAN-NORTH

EST. 1968 PROVOST & PRITCHARD CONSULTING GROUP
An Employee Owned Company
www.provostandpritchard.com
430 E. State Street
Eagle Lake, CA 96130-8811
CLOVIS, CA 93611
559)449-2700 FAX 559)449-2715
https://provostandpritchard.com/

DESIGN ENGINEER: KEVIN BERRYHILL
LICENSE NO: 70415
DRAFTED BY: JB | CHECKED BY: RKB
DATE: 10/11/2021
JOB NO: 295820002
PROJECT NO: 295820002
PHASE:

0 1"
ORIGINAL SCALE SHOWN IS ONE INCH. ADJUST SCALE FOR REDUCED OR ENLARGED PLANS.

SHEET C-5
14 OF 54

10/12/2021 9:46 AM G:\Camrosa Water District-2958\295820002-Camrosa GAC Design Project\300 CAD\340 Sheet Sets\02_Plans_Maps\C-5 PIPING PLAN-NORTH.dwg -Jennifer Bonilla

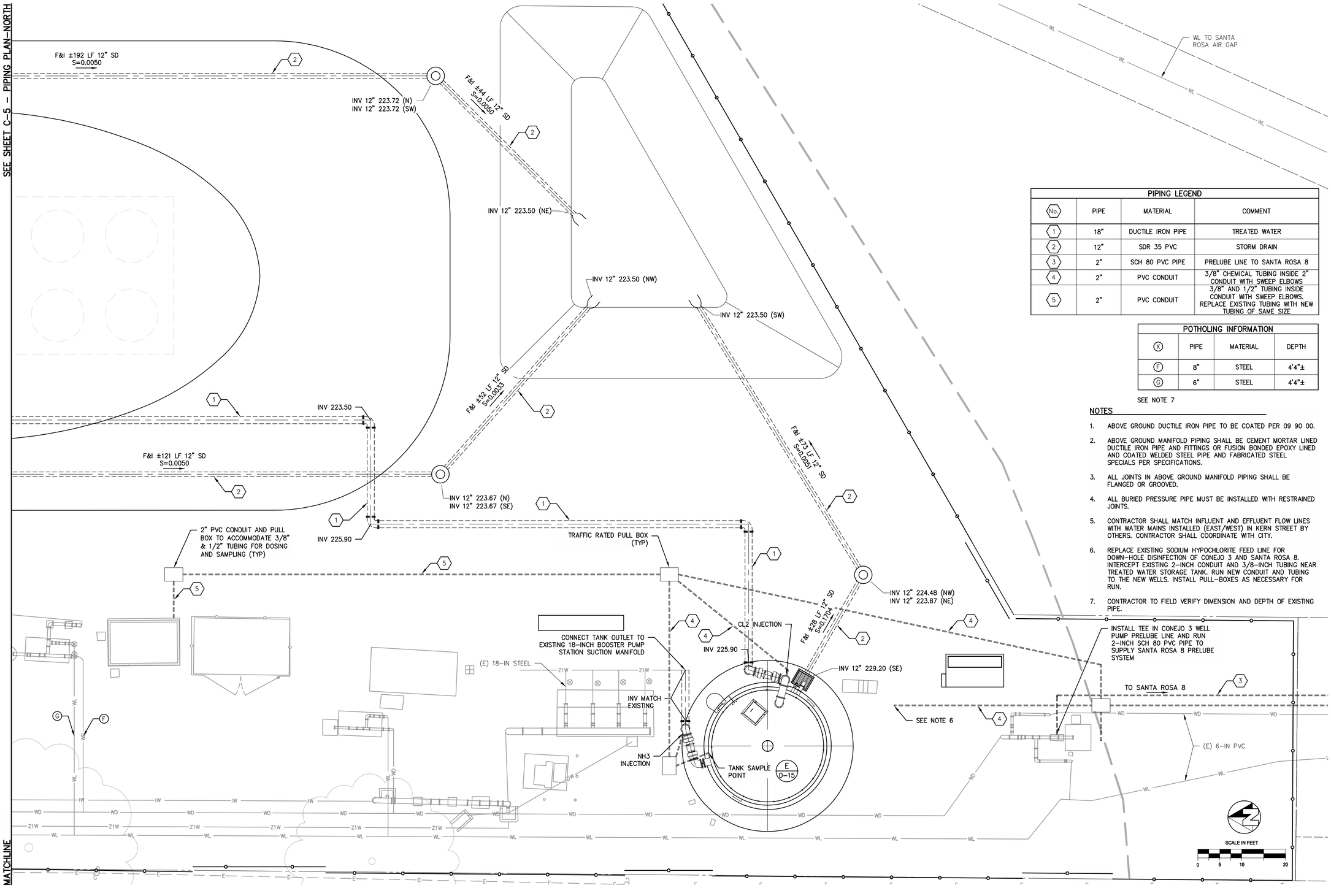


| PIPING LEGEND | | | |
|---|---|---|---|
| No. | PIPE | MATERIAL | COMMENT |
| 1 | 18" | DUCTILE IRON PIPE | TREATED WATER |
| 2 | 12" | SDR 35 PVC | STORM DRAIN |
| 3 | 2" | SCH 80 PVC PIPE | PRELUBE LINE TO SANTA ROSA 8 |
| 4 | 2" | PVC CONDUIT | 3/8" CHEMICAL TUBING INSIDE 2" CONDUIT WITH SWEEP ELBOWS |
| 5 | 2" | PVC CONDUIT | 3/8" AND 1/2" TUBING INSIDE CONDUIT WITH SWEEP ELBOWS. REPLACE EXISTING TUBING WITH NEW TUBING OF SAME SIZE |

| POTHOLING INFORMATION | | | |
|---|---|---|---|
| X | PIPE | MATERIAL | DEPTH |
| F | 8" | STEEL | 4'4"± |
| G | 6" | STEEL | 4'4"± |

SEE NOTE 7

## NOTES

1. ABOVE GROUND DUCTILE IRON PIPE TO BE COATED PER 09 90 00.
2. ABOVE GROUND MANIFOLD PIPING SHALL BE CEMENT MORTAR LINED DUCTILE IRON PIPE AND FITTINGS OR FUSION BONDED EPOXY LINED AND COATED WELDED STEEL PIPE AND FABRICATED STEEL SPECIALS PER SPECIFICATIONS.
3. ALL JOINTS IN ABOVE GROUND MANIFOLD PIPING SHALL BE FLANGED OR GROOVED.
4. ALL BURIED PRESSURE PIPE MUST BE INSTALLED WITH RESTRAINED JOINTS.
5. CONTRACTOR SHALL MATCH INFLUENT AND EFFLUENT FLOW LINES WITH WATER MAINS INSTALLED (EAST/WEST) IN KERN STREET BY OTHERS. CONTRACTOR SHALL COORDINATE WITH CITY.
6. REPLACE EXISTING SODIUM HYPOCHLORITE FEED LINE FOR DOWN–HOLE DISINFECTION OF CONEJO 3 AND SANTA ROSA 8. INTERCEPT EXISTING 2–INCH CONDUIT AND 3/8–INCH TUBING NEAR TREATED WATER STORAGE TANK. RUN NEW CONDUIT AND TUBING TO THE NEW WELLS. INSTALL PULL–BOXES AS NECESSARY FOR RUN.
7. CONTRACTOR TO FIELD VERIFY DIMENSION AND DEPTH OF EXISTING PIPE.

COPYRIGHT 2021 by PROVOST & PRITCHARD ENGINEERING GROUP, INC. ALL RIGHTS RESERVED
The firm of Provost & Pritchard Engineering Group, Inc. expressly reserves its property rights, including copyright and other applicable property rights in these plans. These plans are not to be reproduced, changed, or copied in any form or manner whatsoever, nor are they to be assigned to a third party without first obtaining the expressed written permission and consent of Provost & Pritchard Engineering Group, Inc. In the event of unauthorized reuse of these plans by a third party, Provost & Pritchard Engineering Group, Inc. and shall be indemnified, defended, and held harmless by the third party for any and all liabilities, losses, and claims arising out of the third party's unauthorized reuse of these plans. Provost & Pritchard Engineering Group, Inc. hereby reserves all rights associated with defending and enforcing these rights.

BID ISSUE
10-12-2021

| No. | REVISION | BY | DATE |
|---|---|---|---|

REGISTERED PROFESSIONAL ENGINEER KEVIN M. BERRYHILL No. 70415 STATE OF CALIFORNIA

DATE SIGNED: 10/12/2021

1,2,3–TCP REMOVAL PROJECT FOR
CONEJO WELLS
CAMROSA WATER DISTRICT
CAMARILLO, CA

CIVIL

PIPING PLAN–SOUTH

EST. 1988
PROVOST & PRITCHARD CONSULTING GROUP
An Employee Owned Company
MAIN OFFICE
1401 FAIRCHILD, 93611
CLOVIS, CA 93611
559.449.2700 FAX 559.449.2715
https://provostandpritchard.com/

DESIGN ENGINEER: KEVIN BERRYHILL
LICENSE NO: 70415
DRAFTED BY: JB
CHECKED BY: RKB
DATE: 10/11/2021
JOB NO: 295820002
PROJECT NO: 295820002
PHASE:

0 1"
ORIGINAL SCALE SHOWN IS ONE INCH. ADJUST SCALE FOR REDUCED OR ENLARGED PLANS.

SHEET C-6
15 OF 54

10/12/2021 9:49 AM G:\Camrosa Water District–2958\295820002–Camrosa GAC Design Project\300 CAD\340 Sheet Sets\02_Plans_Maps\C–6 PIPING PLAN–SOUTH.dwg –Jennifer Bonilla

| POINT TABLE | | |
|---|---|---|
| POINT # | NORTHING | EASTING |
| 1 | 268535.71 | 1718980.27 |
| 2 | 268636.13 | 1718980.89 |
| 3 | 268666.13 | 1718981.17 |
| 4 | 268666.13 | 1719022.45 |
| 5 | 268659.19 | 1719032.27 |
| 6 | 268641.42 | 1719032.27 |
| 7 | 268697.58 | 1719022.33 |
| 8 | 268722.23 | 1718982.20 |
| 9 | 268766.83 | 1718982.49 |
| 10 | 268766.83 | 1719174.13 |
| 11 | 268318.65 | 1719169.89 |
| 12 | 268246.24 | 1719043.79 |
| 13 | 268236.18 | 1719026.27 |
| 14 | 268172.96 | 1719025.72 |
| 15 | 268173.24 | 1718966.57 |
| 16 | 268214.20 | 1718966.89 |
| 17 | 268234.75 | 1718967.06 |
| 18 | 268305.31 | 1718967.62 |
| 19 | 268325.31 | 1718967.78 |
| 20 | 268393.44 | 1718968.32 |
| 21 | 268423.81 | 1718968.56 |
| 22 | 268522.60 | 1718970.01 |

| POINT TABLE | | |
|---|---|---|
| POINT # | NORTHING | EASTING |
| 23 | 268654.01 | 1718961.13 |
| 24 | 268754.64 | 1718962.00 |
| 25 | 268697.41 | 1719117.92 |
| 26 | 268657.43 | 1719157.92 |
| 27 | 268405.10 | 1719157.92 |
| 28 | 268365.10 | 1719118.63 |
| 29 | 268365.10 | 1719090.95 |
| 30 | 268405.00 | 1719050.95 |
| 31 | 268624.56 | 1719050.91 |
| 32 | 268667.38 | 1719023.68 |
| 33 | 268643.04 | 1719066.98 |
| 34 | 268667.42 | 1719086.84 |
| 35 | 268601.29 | 1719141.94 |
| 36 | 268474.10 | 1719141.89 |
| 37 | 268408.42 | 1719104.40 |
| 38 | 268472.30 | 1719066.85 |
| 39 | 268597.95 | 1719141.92 |
| 40 | 268597.95 | 1719157.92 |
| 41 | 268522.95 | 1719157.92 |
| 42 | 268522.95 | 1719141.90 |
| 43 | 268560.45 | 1719149.92 |
| 44 | 268605.03 | 1719127.22 |

| POINT TABLE | | |
|---|---|---|
| POINT # | NORTHING | EASTING |
| 45 | 268605.03 | 1719081.56 |
| 46 | 268621.70 | 1719075.12 |
| 47 | 268621.70 | 1719102.12 |
| 48 | 268628.49 | 1719104.25 |
| 49 | 268628.49 | 1719121.75 |
| 50 | 268644.70 | 1719106.45 |
| 51 | 268644.70 | 1719123.45 |
| 52 | 268742.86 | 1719055.24 |
| 53 | 268742.86 | 1719065.24 |
| 54 | 268657.42 | 1718985.94 |
| 55 | 268657.42 | 1719023.94 |
| 56 | 268614.42 | 1718985.94 |
| 57 | 268614.42 | 1719017.94 |
| 58 | 268630.33 | 1719024.17 |
| 59 | 268630.33 | 1719032.17 |
| 60 | 268564.84 | 1719024.42 |
| 61 | 268564.84 | 1719031.92 |
| 62 | 268344.98 | 1719023.50 |
| 63 | 268344.98 | 1719027.00 |
| 64 | 268252.14 | 1719010.64 |
| 65 | 268252.14 | 1719018.14 |
| 66 | 268586.10 | 1719008.59 |

| POINT TABLE | | |
|---|---|---|
| POINT # | NORTHING | EASTING |
| 67 | 268557.19 | 1719003.31 |
| 68 | 268550.40 | 1719003.32 |
| 69 | 268292.76 | 1718997.25 |
| 70 | 268270.96 | 1719036.25 |
| 71 | 268707.36 | 1719040.67 |
| 72 | 268609.57 | 1719059.15 |
| 73 | 268565.83 | 1719059.15 |
| 74 | 268488.74 | 1719001.07 |
| 75 | 268488.74 | 1719059.15 |
| 76 | 268367.31 | 1719059.15 |
| 77 | 268660.49 | 1719168.38 |
| 78 | 268368.39 | 1719149.94 |
| 79 | 268336.76 | 1719148.87 |
| 80 | 268330.45 | 1719149.22 |
| 81 | 268336.77 | 1719097.91 |
| 82 | 268302.35 | 1719098.42 |
| 83 | 268352.22 | 1719164.48 |
| 84 | 268321.21 | 1719165.01 |
| 85 | 268276.52 | 1719083.47 |
| 86 | 268352.23 | 1719082.44 |

HILL CANYON RD.

SCALE IN FEET
0 10 20 40

COPYRIGHT 2021 by PROVOST & PRITCHARD ENGINEERING GROUP, INC. ALL RIGHTS RESERVED
The firm of Provost & Pritchard Engineering Group, Inc. expressly reserves its common law copyright and other applicable property rights in these plans. These plans are not to be reproduced, changed, or copied in any form or manner whatsoever, nor are they to be assigned to a third party without first obtaining the expressed written permission and consent of Provost & Pritchard Engineering Group, Inc. In the event of unauthorized reuse of these plans by a third party, the third party agrees to hold Provost & Pritchard Engineering Group, Inc. harmless, and shall indemnify Provost & Pritchard Engineering Group, Inc. for all loss, damage, and liability associated with defending and enforcing these rights.

BID ISSUE
10-12-2021

| No. | REVISION | BY | DATE |
|---|---|---|---|

REGISTERED PROFESSIONAL ENGINEER
KEVIN R. BERRYHILL
No. 70415
STATE OF CALIFORNIA
DATE SIGNED: 10/12/2021

1,2,3-TCP REMOVAL PROJECT FOR
CONEJO WELLS
CAMROSA WATER DISTRICT
CAMARILLO, CA

CIVIL

SITE COORDINATES

EST. 1968
PROVOST& PRITCHARD CONSULTING GROUP
An Employee Owned Company
455 E. PARK AVENUE
CLOVIS, CALIFORNIA 93611
559.449.2700 FAX 559.449.2715
https://provostandpritchard.com/

DESIGN ENGINEER: KEVIN BERRYHILL
LICENSE NO: 70415
DRAFTED BY: JB | CHECKED BY: RKB
DATE: 10/11/2021
JOB NO: 295820002
PROJECT NO: 295820002
PHASE:
0 1"
ORIGINAL SCALE SHOWN IS ONE INCH. ADJUST SCALE FOR REDUCED OR ENLARGED PLANS.

SHEET C-7
16 OF 54

10/12/2021 9:52 AM G:\Camrosa Water District-2958\295820002-Camrosa GAC Design Project\300 CAD\340 Sheet Sets\02_Plans_Maps\C-7 SITE COORDINATES.dwg -Jennifer Bonilla

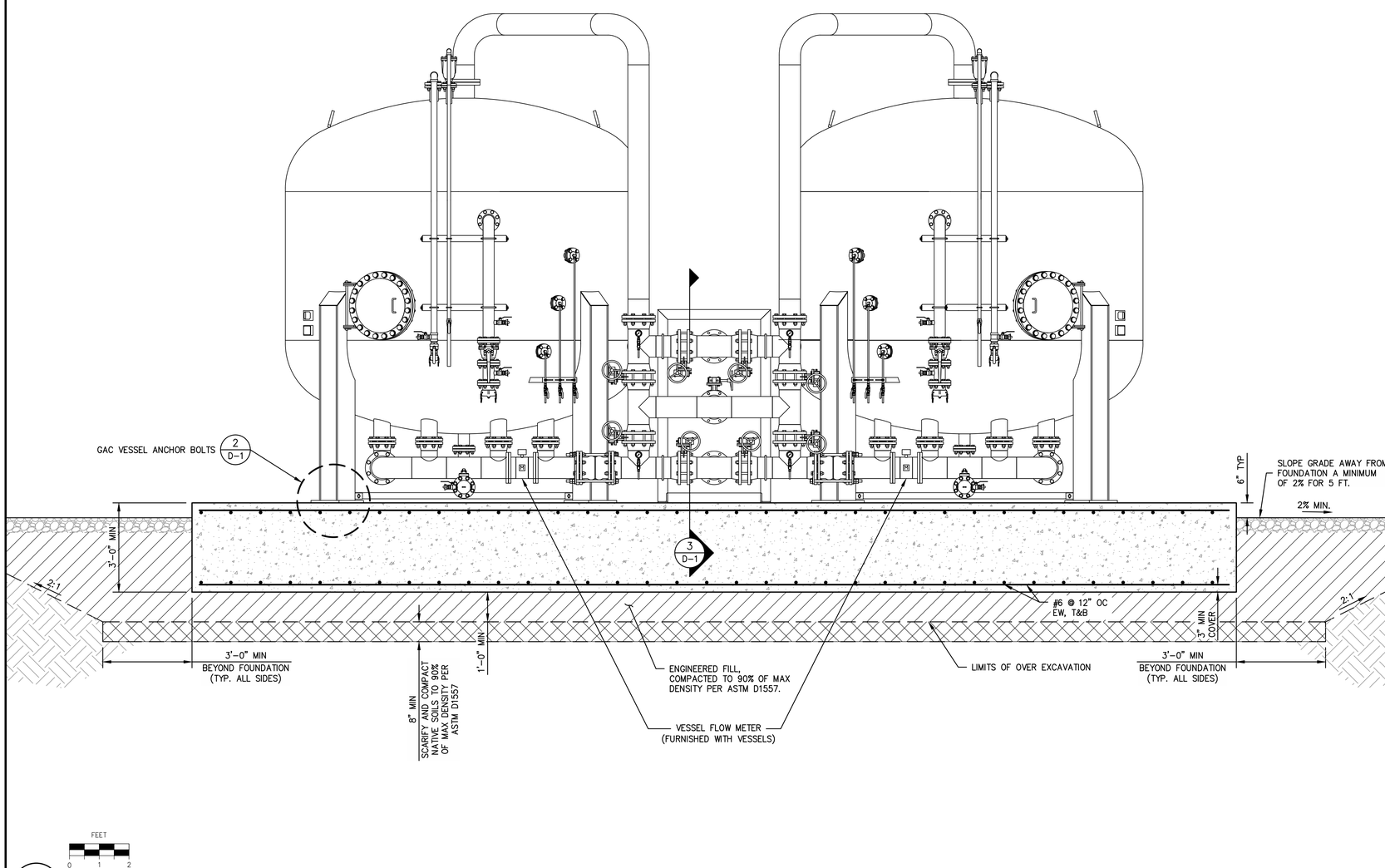


1
D-1

GAC VESSELS FRONT VIEW

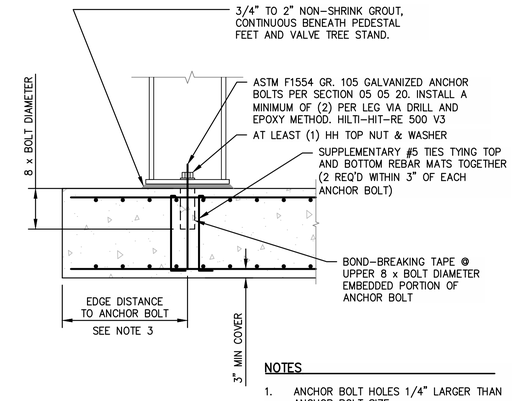


NOTES

1. ANCHOR BOLT HOLES 1/4" LARGER THAN ANCHOR BOLT SIZE.
2. MINIMUM ANCHOR BOLT EMBEDMENT AS DETERMINED BY VESSEL SUPPLIER.
3. ANCHOR BOLT SIZE AND EDGE DISTANCE DETERMINED BY VESSEL SUPPLIER. ALLOW FOR STRETCH LENGTH (MIN 8 BOLT DIAMETERS) OR ANCHOR CHAIR.

2
D-1

GAC VESSEL ANCHOR BOLTS

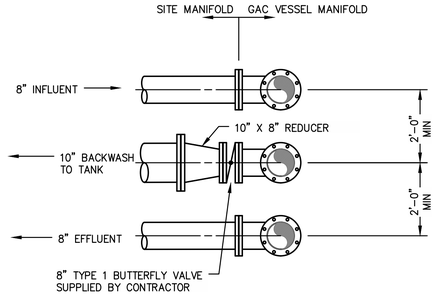


NOTES

1. ORIENTATION OF VESSEL NOZZLES SHALL BE AS SHOWN ON SITE PLANS.

NOT TO SCALE

3
D-1

VESSEL PIPE CONNECTION

COPYRIGHT 2021 by PROVOST & PRITCHARD ENGINEERING GROUP, INC. ALL RIGHTS RESERVED
The firm of Provost & Pritchard Engineering Group, Inc. expressly reserves its common law copyright and other applicable property rights in these plans. These plans are not to be reproduced, changed, or copied in any form or manner whatsoever, nor are they to be assigned to a third party without first obtaining the written permission and consent of Provost & Pritchard Engineering Group, Inc. In the event of unauthorized reuse of these plans by a third party, the third party shall hold the firm of Provost & Pritchard Engineering Group, Inc. harmless, and shall bear the cost of Provost & Pritchard Engineering Group, Inc.'s legal fees associated with defending and enforcing these rights.

BID ISSUE
10-12-2021

| No. | REVISION | BY | DATE |
|---|---|---|---|

REGISTERED PROFESSIONAL ENGINEER
R. KEVIN BERRYHILL
No. 70415
CIVIL
STATE OF CALIFORNIA

DATE SIGNED: 10/12/2021

1,2,3-TCP REMOVAL PROJECT FOR
CONEJO WELLS
CAMROSA WATER DISTRICT
CAMARILLO, CA

DETAILS

GAC DETAILS

EST. 1968
PROVOST & PRITCHARD
CONSULTING GROUP
An Employee Owned Company
455 W FIR AVENUE
CLOVIS, CALIFORNIA 93611
559449-2700 FAX 559449-2715
https://provostandpritchard.com/

DESIGN ENGINEER: KEVIN BERRYHILL
LICENSE NO: 70415
DRAFTED BY: JB
CHECKED BY: RKB
DATE: 10/11/2021
JOB NO: 295820002
PROJECT NO: 295820002
PHASE:
0 1"
ORIGINAL SCALE SHOWN IS ONE INCH. ADJUST SCALE FOR REDUCED OR ENLARGED PLANS.

SHEET D-1



10/12/2021 9:36 AM \\ppeng.com\pzdata\clients\Camrosa Water District-2958\295820002-Camrosa GAC Design Project\300 CAD\340 Sheet Sets\04_Civil_Details\D-1 GAC DETAILS.dwg -Michael McConnell

## LEGEND

| | | | | | |
|---|---|---|---|---|---|
| ARV | AIR RELIEF VALVE | 1 D-5 | SLV | RESTRAINED SLEEVE COUPLING | |
| CDI | CARBON DIOXIDE INJECTION POINT | | SC | SHOWER/ EYE WASH CONNECTION | |
| CDO | CONNECTION TO CARBON DIOXIDE BOOSTER PUMP STATION | | SH | SODIUM HYDROXIDE INJECTION POINT | 3 D-4 |
| FS | FABRICATED STEEL SPECIAL PER SPECIFICATION 40 05 14 | | SP | CONNECTION FOR SAMPLE LINE TO WATER QUALITY ANALYZER PANEL | 3 D-4 |
| GV | 8" GLOBE-ANGLE PRESSURE REDUCING/ SUSTAINING VALVE | | TS | TIERED PIPE SUPPORT | 1 D-4 |
| PT | DIFFERENTIAL PRESSURE TRANSDUCER | 4 D-5 | WH | WHARF HYDRANT – 2 ½" | 5 D-6 |
| BFP | 10" REDUCED PRESSURE BACKFLOW PREVENTER | W-48 D-18 | BF | BLIND FLANGE | |

| | | | |
|---|---|---|---|
| CR | CONCENTRIC REDUCER | | |
| X | CROSS | | |
| E | ELBOW | | |
| GC | GROOVED COUPLING | | |
| MV | MOTOR ACTUATED VALVE | | |
| T | TEE | | |
| | DIRECTION OF FLOW | | |

## NOTES

1. SOUTHERN TWO PAIRS OF VESSELS ARE FUTURE AND NOT INCLUDED IN PROJECT. CONTRACTOR TO PROVIDE POWER AND COMMUNICATIONS CONDUIT FOR FUTURE VESSELS AS PART OF THIS PROJECT.

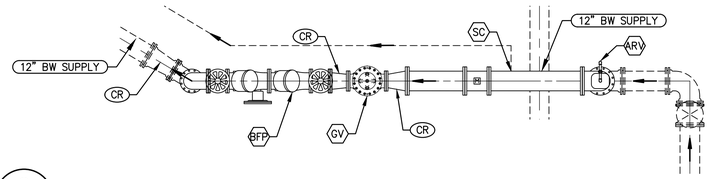


2 / D-2

## REDUCED PRESSURE BACKFLOW PREVENTER

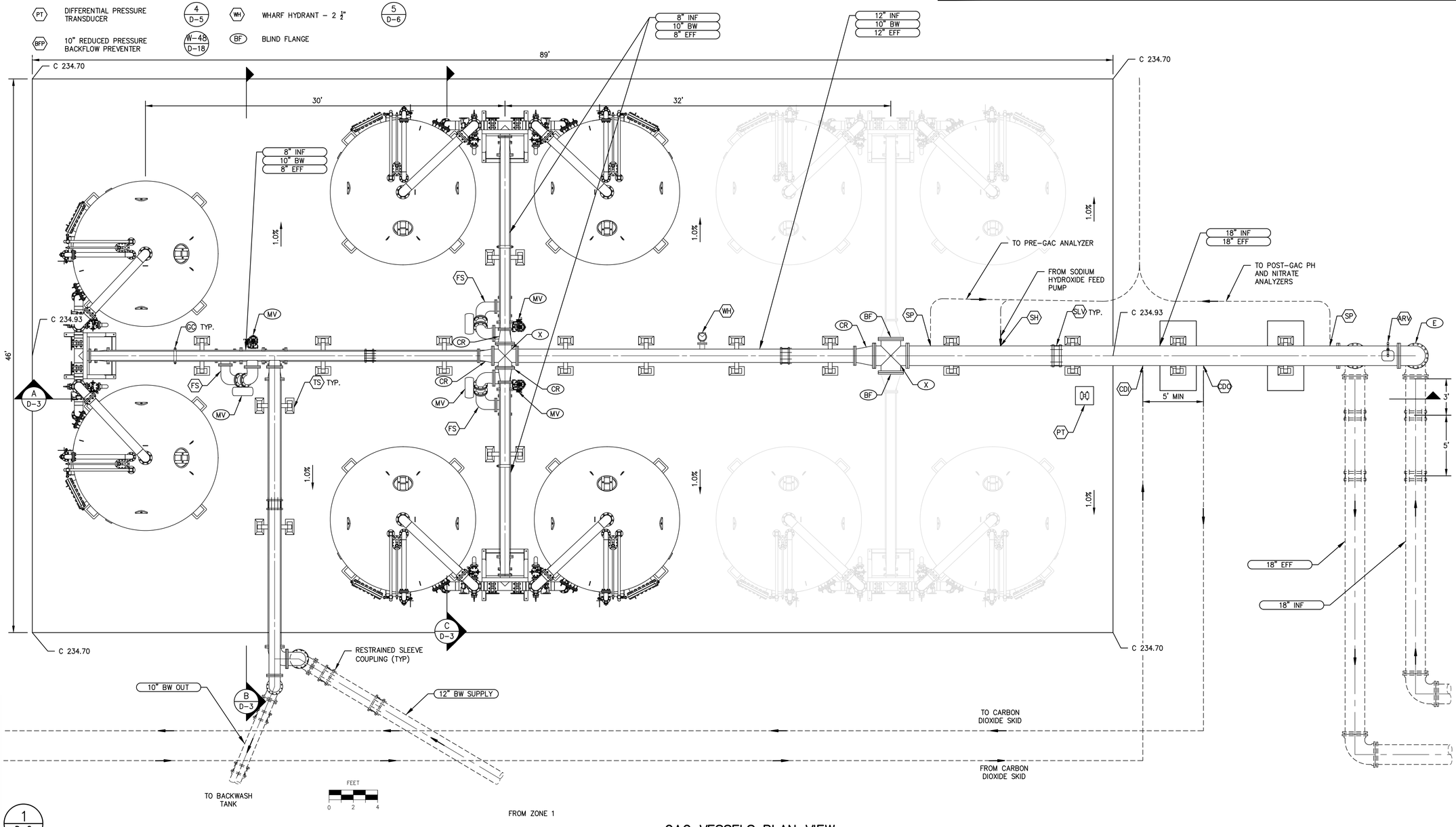


1 / D-2

## GAC VESSELS PLAN VIEW


COPYRIGHT 2021 by PROVOST & PRITCHARD ENGINEERING GROUP, INC. ALL RIGHTS RESERVED
The firm of Provost & Pritchard Engineering Group, Inc. expressly reserves its property rights, including copyright and other applicable property rights in these plans. These plans are not to be reproduced, changed, or copied in any form or manner whatsoever nor are they to be assigned to a third party without first obtaining the expressed written permission and consent of Provost & Pritchard Engineering Group, Inc. In the event of unauthorized reuse of these plans by a third party, the third party agrees to hold harmless, and shall indemnify Provost & Pritchard Engineering Group, Inc. and its officers, employees, and agents, against any and all liability, loss or legal fees associated with defending and enforcing these rights.


| No. | REVISION | BY | DATE |
|---|---|---|---|
| | BID ISSUE 10-12-2021 | | |

REGISTERED PROFESSIONAL ENGINEER KEVIN M. BERRYHILL No. 70415 STATE OF CALIFORNIA

DATE SIGNED: 10/12/2021

1,2,3-TCP REMOVAL PROJECT FOR
CONEJO WELLS
CAMROSA WATER DISTRICT
CAMARILLO, CA

DETAILS

GAC DETAILS


EST. 1968 PROVOST & PRITCHARD CONSULTING GROUP
An Employee Owned Company
455 W. FIR AVENUE
CLOVIS, CALIFORNIA 93611
559 449-2700 FAX 559 449-2715
https://provostandpritchard.com/


DESIGN ENGINEER: KEVIN BERRYHILL
LICENSE NO: 70415

| DRAFTED BY: | CHECKED BY: |
|---|---|
| JB | RKB |

DATE: 10/11/2021
JOB NO: 295820002
PROJECT NO: 295820002
PHASE:

0 1"
ORIGINAL SCALE SHOWN IS ONE INCH. ADJUST SCALE FOR REDUCED OR ENLARGED PLANS.

SHEET D-2
18 OF 54

10/12/2021 9:37 AM \\ppeng.com\pzdata\clients\Camrosa Water District-295820002-Camrosa GAC Design Project\300 CAD\340 Sheet Sets\04_Civil_Details\D-2 GAC DETAILS.dwg –Michael McConnell

LEGEND

| | | | | | | | | | |
|---|---|---|---|---|---|---|---|---|---|
| ARV | AIR RELIEF VALVE | 1 D-5 | SLV | RESTRAINED SLEEVE COUPLING | WH | WHARF HYDRANT – 2 ½" | 5 D-6 | RE | REDUCING ELBOW |
| CDI | CARBON DIOXIDE INJECTION POINT | | SP | CONNECTION FOR SAMPLE LINE TO WATER QUALITY ANALYZER PANEL | BF | BLIND FLANGE | | T | TEE |
| CDO | CONNECTION TO CARBON DIOXIDE BOOSTER PUMP STATION | | ST | SAMPLE TAP | BV | BUTTERFLY VALVE | | → | DIRECTION OF FLOW |
| FS | FABRICATED STEEL SPECIAL PER SPECIFICATION 40 05 14 | | SH | SODIUM HYDROXIDE INJECTION POINT | CR | CONCENTRIC REDUCER | | GC | GROOVED COUPLING |
| GV | 8" GLOBE–ANGLE PRESSURE REDUCING/ SUSTAINING VALVE | | TO | 3/4" THREADED OUTLET FOR PRESSURE TRANSDUCER CONNECTION | X | CROSS | | | |
| PT | DIFFERENTIAL PRESSURE TRANSDUCER | 4 D-5 | TS | TIERED PIPE SUPPORT | ER | ECCENTRIC REDUCER | | | |
| | | | | | E | ELBOW | | | |
| | | | | | MV | MOTOR ACTUATED VALVE | | | |

NOTES

1. CONTRACTOR TO FIELD VERIFY CLEARANCE FOR POTENTIAL INTERFERENCE BETWEEN ELECTRIC ACTUATORS AND PIPES.
2. INSTALL CO2 MANUFACTURER FURNISHED CARBONIC ACID INJECTION ASSEMBLY PER MANUFACTURER'S INSTRUCTIONS.
3. ALL THREADED NOZZLES 3–INCHES AND SMALLER SHALL INCLUDE NYLON DIELECTRIC ISOLATION BUSHINGS. ALL LARGER NOZZLES INVOLVING DISSIMILAR METALS OTHER THAN STEEL JOINED TO DUCTILE IRON SHALL INCLUDE DIELECTRIC ISOLATION GASKET AND BOLT KITS.
4. ALL NOZZLES ON DUCTILE IRON PIPE SHALL BE WELDED. SERVICE SADDLES WILL NOT BE ACCEPTED.

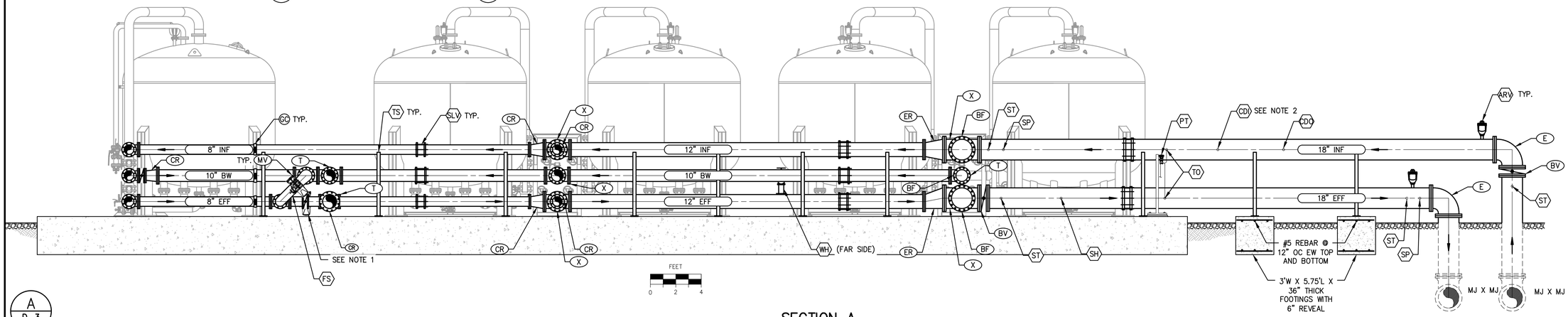


A D-3

SECTION A

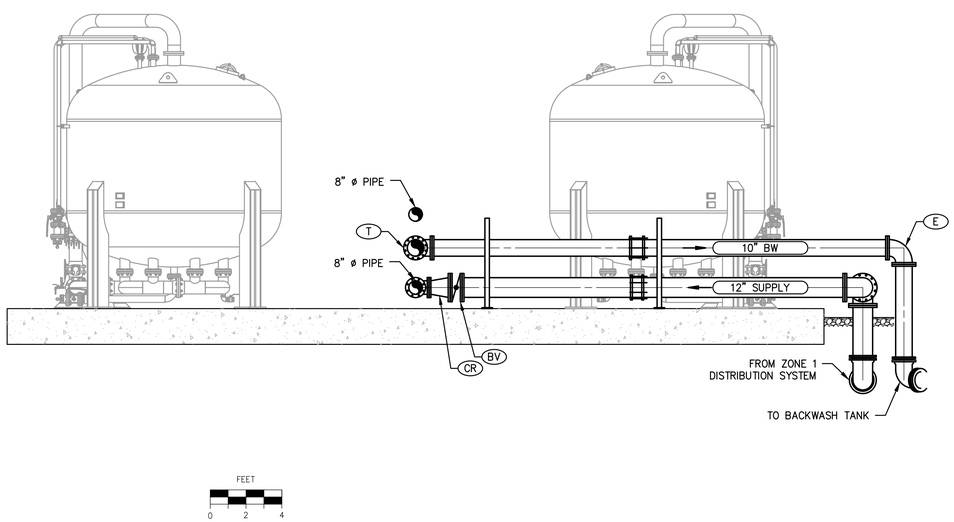


B D-3

SECTION B

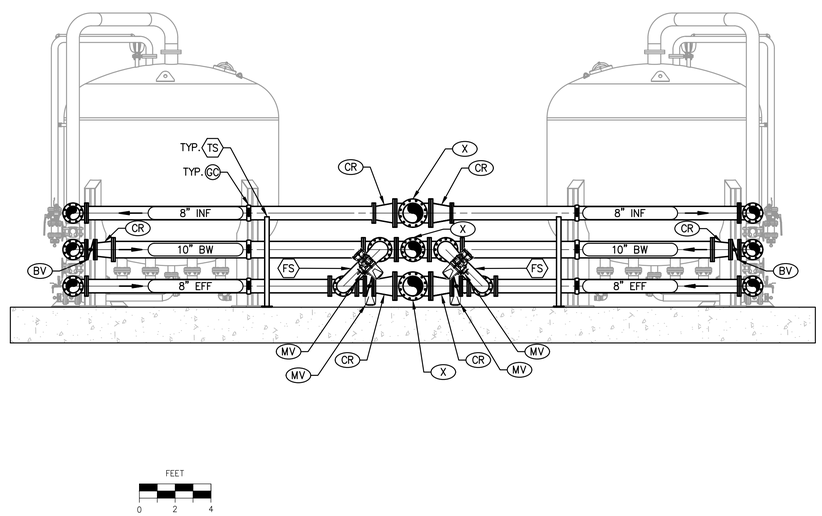


C D-3

SECTION C

COPYRIGHT 2021 by PROVOST & PRITCHARD ENGINEERING GROUP, INC. ALL RIGHTS RESERVED
The firm of Provost & Pritchard Engineering Group, Inc. expressly reserves its common law copyright and other applicable property rights in these plans. These plans are not to be reproduced, changed, or copied in any form or manner whatsoever, nor are they to be assigned to a third party without first obtaining the written permission and consent of Provost & Pritchard Engineering Group, Inc. In the event of unauthorized reuse of these plans by a third party, the third party shall hold the firm of Provost & Pritchard Engineering Group, Inc. harmless, and shall bear the cost of Provost & Pritchard Engineering Group, Inc.'s legal fees associated with defending and enforcing these rights.

BID ISSUE
10-12-2021

| No. | REVISION | BY | DATE |
|---|---|---|---|

REGISTERED PROFESSIONAL ENGINEER
R. KEVIN BERRYHILL
No. 70415
STATE OF CALIFORNIA

DATE SIGNED: 10/12/2021

1,2,3–TCP REMOVAL PROJECT FOR CONEJO WELLS
CAMROSA WATER DISTRICT
CAMARILLO, CA

DETAILS

GAC DETAILS

EST. 1968
PROVOST & PRITCHARD
CONSULTING GROUP
An Employee Owned Company
455 W FIR AVENUE
CLOVIS, CALIFORNIA 93611
559449-2700 FAX 559449-2715
https://provostandpritchard.com/

DESIGN ENGINEER: KEVIN BERRYHILL
LICENSE NO: 70415

| DRAFTED BY: | CHECKED BY: |
|---|---|
| JB | RKB |

DATE: 10/11/2021
JOB NO: 295820002
PROJECT NO: 295820002
PHASE:
0 1"
ORIGINAL SCALE SHOWN IS ONE INCH. ADJUST SCALE FOR REDUCED OR ENLARGED PLANS.

SHEET D-3



10/12/2021 9:38 AM \\ppeng.com\pzdata\clients\Camrosa Water District-2958\295820002-Camrosa GAC Design Project\300 CAD\340 Sheet Sets\04_Civil_Details\D-3 GAC DETAILS.dwg –Michael McConnell

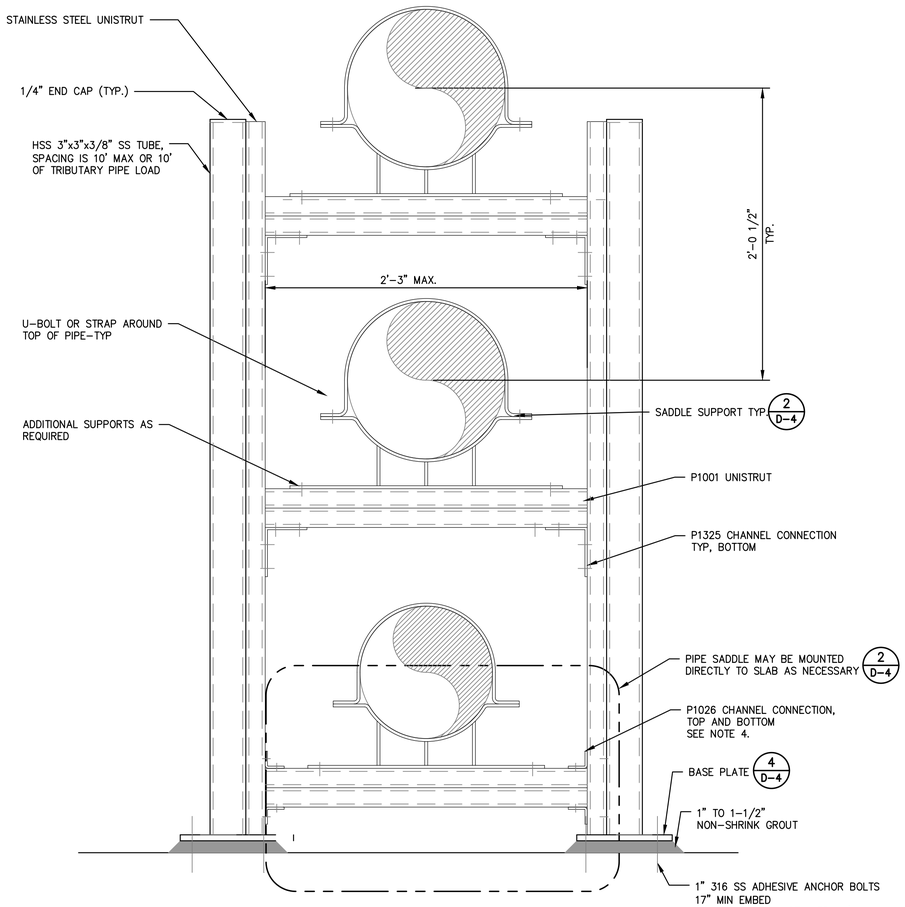


NOTES

1. PLACE 1/8" TEFLON PAD BETWEEN PIPE AND SADDLE.
2. MODULAR FRAMING COMPONENTS SHALL BE STAINLESS STEEL CHANNEL, FITTINGS, AND HARDWARE, UNISTRUT B-LINE, KUMAR OR EQUAL.
3. WHERE LEGS FALL OUTSIDE OF THE GAC VESSEL PAD, BOTH LEGS TO BE CENTERED ON A 3' WIDE BY 5.75' LONG BY 36" THICK FTG, 6" REVEAL WITH #5 REBAR @ 9" OC EW TOP AND BOTTOM.
4. P1026 IS ACCEPTABLE TOP AND BOTTOM IF P1325 DOES NOT FIT.
5. CONTRACTOR TO FIELD VERIFY MANIFOLD HEIGHTS

NOT TO SCALE

1/D-4 TIERED PIPE SUPPORT

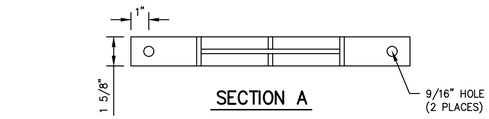


SECTION A

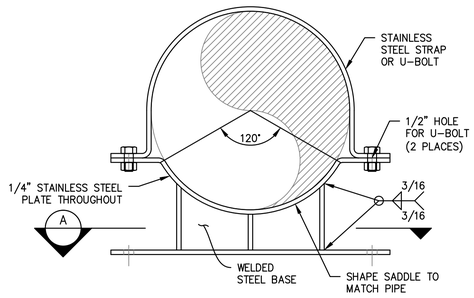


NOTES

1. TOP STRAP HOLD-DOWN BOLTS TO BE LEFT LOOSE TO ALLOW PIPE TO MOVE AXIALLY IN THE SUPPORT.

INCHES
0 3
3" = 1'-0"

2/D-4 PIPE SADDLE

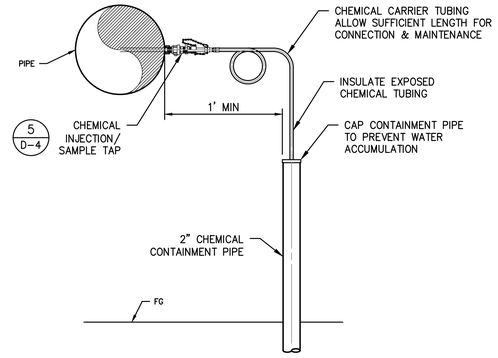


NOT TO SCALE

3/D-4 CHEMICAL INJECTION/SAMPLE TAP

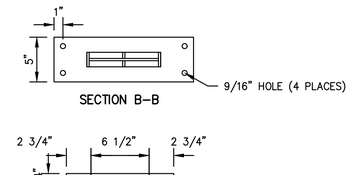


SECTION B-B

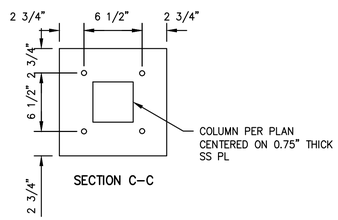


SECTION C-C

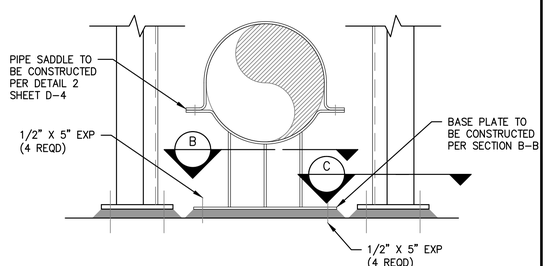


INCHES
0 6
1-1/2" = 1'-0"

4/D-4 TIERED PIPE SUPPORT – LOWER SUPPORT ALTERNATIVE

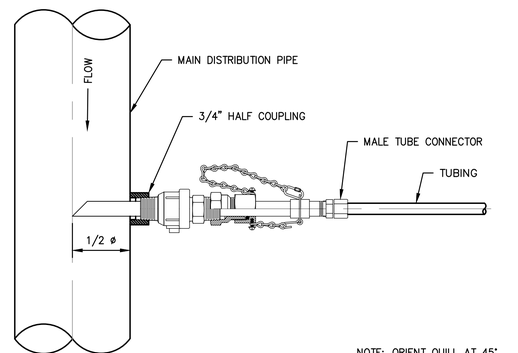


NOTES

1. CHEMICAL INJECTION TAPS SHALL BE SAF-T-FLO MODEL EB-125 INJECTION ASSEMBLY OR APPROVED EQUAL.
2. SAMPLE TAPS SHALL BE SAF-T-FLO MODEL SP-075 OR APPROVED EQUAL.
3. TUBE CHAMFER SHALL FACE UPSTREAM.

NOTE: ORIENT QUILL AT 45° FROM VERTICAL AS SHOWN BELOW

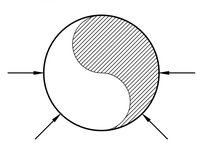

NOT TO SCALE

5/D-4 CHEMICAL INJECTION/SAMPLE TAP

COPYRIGHT 2021 by PROVOST & PRITCHARD ENGINEERING GROUP, INC. ALL RIGHTS RESERVED
The firm of Provost & Pritchard Engineering Group, Inc. expressly reserves its common law copyright and other applicable property rights in these plans. These plans are not to be reproduced, changed, or copied in any form or manner whatsoever, nor are they to be assigned to a third party without first obtaining the written permission and consent of Provost & Pritchard Engineering Group, Inc. In the event of unauthorized reuse of these plans by a third party, Provost & Pritchard Engineering Group, Inc. and its Provost & Pritchard Engineering Group, Inc. hereby agree to defend, indemnify, and hold harmless Provost & Pritchard Engineering Group, Inc. from all liabilities, claims, losses, and legal fees associated with defending and enforcing these rights.

| No. | REVISION | BY | DATE |
|---|---|---|---|

BID ISSUE
10-12-2021

REGISTERED PROFESSIONAL ENGINEER KEVIN M. BERRYHILL No. 70415 STATE OF CALIFORNIA

DATE SIGNED: 10/12/2021

1,2,3-TCP REMOVAL PROJECT FOR
CONEJO WELLS
CAMROSA WATER DISTRICT
CAMARILLO, CA

DETAILS

MISC DETAILS

EST. 1968 PROVOST& PRITCHARD CONSULTING GROUP
An Employee Owned Company
CLOVIS OFFICE
1234 W. FIR AVENUE
CLOVIS, CA 93611-0811
559/449-2700 FAX 559/449-2715
https://provostandpritchard.com

DESIGN ENGINEER: KEVIN BERRYHILL
LICENSE NO: 70415
DRAFTED BY: JB
CHECKED BY: RKB
DATE: 10/11/2021
JOB NO: 295820002
PROJECT NO: 295820002
PHASE:

0 1"
ORIGINAL SCALE SHOWN IS ONE INCH. ADJUST SCALE FOR REDUCED OR ENLARGED PLANS.

SHEET D-4
20 OF 54

10/12/2021 9:39 AM \\ppeng.com\prdata\Clients\Camrosa Water District-2958\295820002-Camrosa GAC Design Project\300 CAD\340 Sheet Sets\04_Civil_Details\D-4 MISC DETAILS.dwg -Michael McConnell

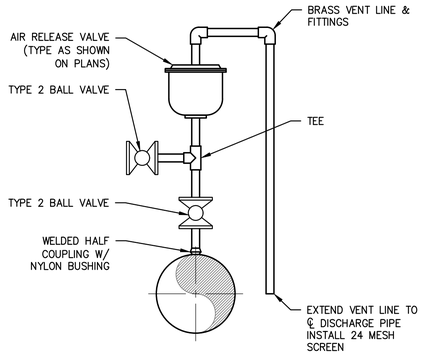


NOTES

1. AIR RELEASE SIZE AS NOTED ON PLANS. OVERSIZE NOZZLE TO ALLOW FOR INSTALLATION OF NYLON DIELECTRIC BUSING.
2. BRASS PIPE AND VALVE SIZE TO BE THE SAME AS AIR RELEASE VALVE SIZE.

NOT TO SCALE

1 / D-5 COMBINATION AIR RELEASE VALVE

| DIMENSIONS | | | | | |
|---|---|---|---|---|---|
| PIPE SIZE | SPACING (MAX FT.) | "A" | "B" | "C" MIN | "C" MAX |
| 2 1/2" | 10 | 2 1/2" | 1 1/2" | 6 7/8" | 11 3/8" |
| 3" | 10 | 2 1/2" | 1 1/2" | 7 3/16" | 11 11/16" |
| 4" | 10 | 3" | 2 1/2" | 7 13/16" | 12 5/16" |
| 6" | 15 | 3" | 2 1/2" | 9 1/16" | 13 9/16" |
| 8" | 15 | 3" | 2 1/2" | 10 1/2" | 15" |
| 10" | 15 | 3" | 2 1/2" | 11 9/16" | 16 1/16" |
| 12" | 15 | 3" | 2 1/2" | 12 9/16" | 17 1/16" |
| 14" | 15 | 4" | 3" | 14 5/16" | 18 13/16" |
| 16" | 15 | 4" | 3" | 15 5/16" | 19 13/16" |
| 18" | 15 | 4" | 3" | | |

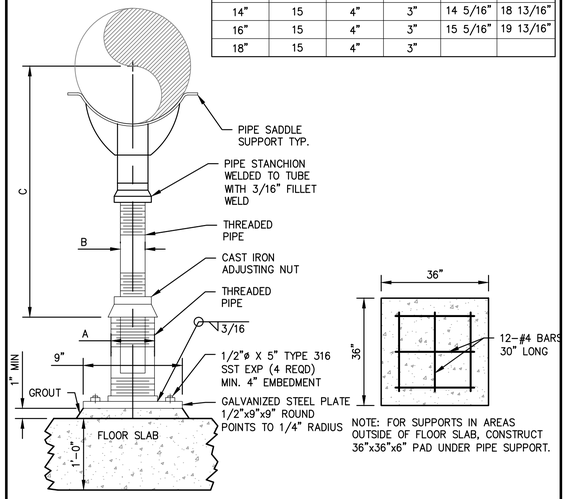


NOTE: FOR SUPPORTS IN AREAS OUTSIDE OF FLOOR SLAB, CONSTRUCT 36"x36"x6" PAD UNDER PIPE SUPPORT.

NOT TO SCALE

2 / D-5 ADJUSTABLE PIPE SUPPORT

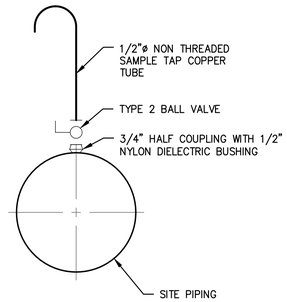


NOTES

1. DIRECT TAP FOR DIP OR WELD DIRECTLY TO WSP

NOT TO SCALE

3 / D-5 TYPE 1 SAMPLE TAP

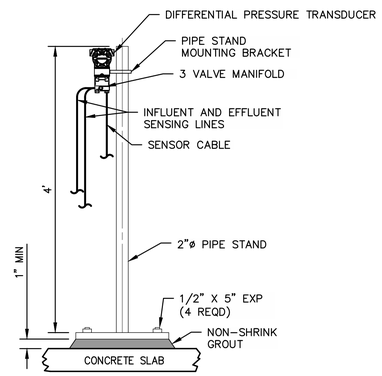


NOTES

1. FOR SUPPORTS IN AREAS OUTSIDE OF CONCRETE SLAB, CONSTRUCT 18"X18"X6" PAD UNDER PIPE SUPPORT.

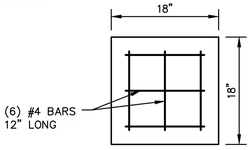


NOT TO SCALE

4 / D-5 DIFFERENTIAL PRESSURE TRANSDUCER

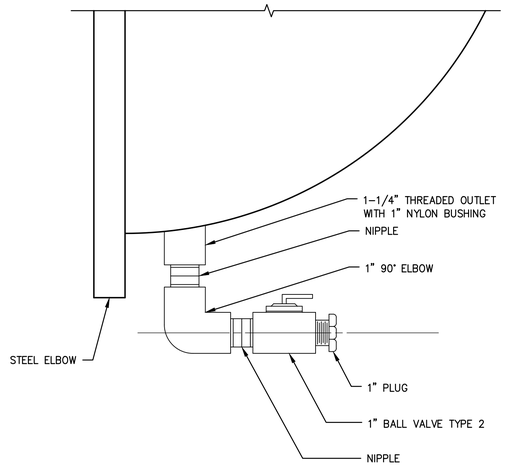


NOTE

1. ALL PIPE AND FITTINGS SHALL BE SCH 40 BRASS

NOT TO SCALE

5 / D-5 THREADED OUTLET 1

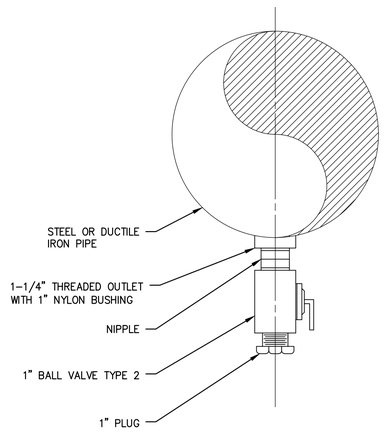


NOTE

1. ALL PIPE AND FITTINGS SHALL BE SCH 40 BRASS

NOT TO SCALE

6 / D-5 THREADED OUTLET 2

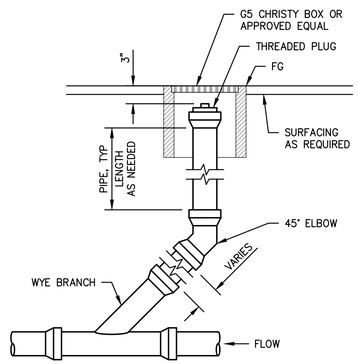


FEET 0 .5 1

7 / D-5 CLEANOUT

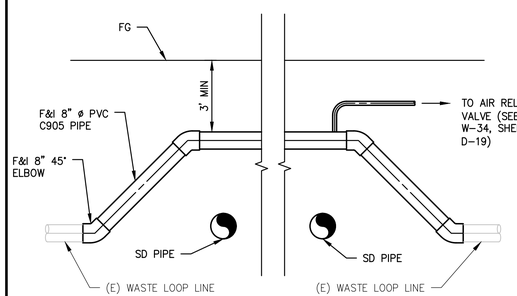


8 / D-5 WASTE LOOP CROSSING DETAIL

COPYRIGHT 2021 by PROVOST & PRITCHARD ENGINEERING GROUP, INC. ALL RIGHTS RESERVED
The firm of Provost & Pritchard Engineering Group, Inc. (authors of these plans) expressly reserves its property rights in these plans. These plans are not to be reproduced, changed, or copied in any form or manner whatsoever, nor are they to be assigned to a third party without first obtaining the expressed written permission and consent of Provost & Pritchard Engineering Group, Inc. In the event of unauthorized reuse of these plans by a third party, Provost & Pritchard Engineering Group, Inc. shall be held harmless, and shall be indemnified by said third party. Provost & Pritchard Engineering Group, Inc. hereby asserts its rights to these plans as instruments of service, and shall retain all legal rights associated with defending and enforcing these rights.

BID ISSUE
10-12-2021

| No. | REVISION | BY | DATE |
|---|---|---|---|

REGISTERED PROFESSIONAL ENGINEER KEVIN M. BERRYHILL No. 70415 STATE OF CALIFORNIA

DATE SIGNED: 10/12/2021

1,2,3-TCP REMOVAL PROJECT FOR
CONEJO WELLS
CAMROSA WATER DISTRICT
CAMARILLO, CA

DETAILS

MISC DETAILS

EST. 1963 PROVOST& PRITCHARD CONSULTING GROUP
An Employee Owned Company
286 W. CROMWELL AVENUE
FRESNO, CALIFORNIA 93711
559 449-2700 FAX 559 449-2715
https://provostandpritchard.com

DESIGN ENGINEER: KEVIN BERRYHILL
LICENSE NO: 70415

| DRAFTED BY: | CHECKED BY: |
|---|---|
| JB | RKB |

DATE: 10/11/2021
JOB NO: 295820002
PROJECT NO: 295820002
PHASE:

0 1"
ORIGINAL SCALE SHOWN IS ONE INCH. ADJUST SCALE FOR REDUCED OR ENLARGED PLANS.

SHEET D-5
21 OF 54

10/12/2021 9:41 AM \\ppeng.com\prjdata\clients\Camrosa Water District-295&295820002-Camrosa GAC Design Project\300 CAD\340 Sheet Sets\04_Civil_Details\D-5 MISC DETAILS.dwg —Michael McConnell

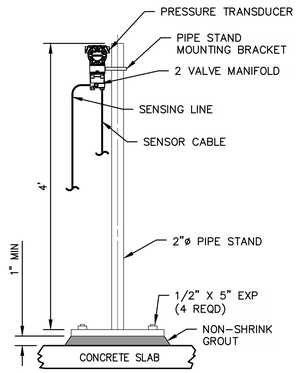


NOTES

1. FOR SUPPORTS IN AREAS OUTSIDE OF CONCRETE SLAB, CONSTRUCT 18"X18"X6" PAD UNDER PIPE SUPPORT.
2. REFER TO SPECIFICATION 40 91 30.

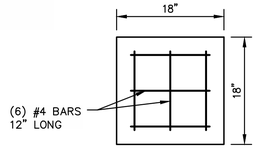


NOT TO SCALE

1 D-6

## PRESSURE TRANSDUCER

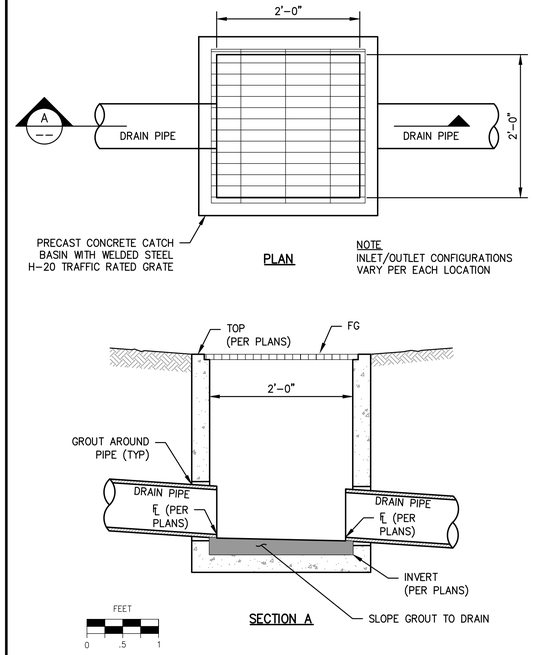


2 D-6

## DRAIN INLET

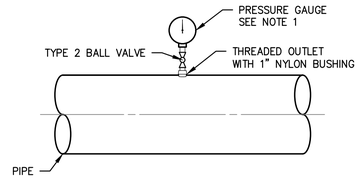


NOTES

1. PRESSURE GAGE TYPE AS NOTED ON PLANS. REFER TO SPECIFICATION 40 91 30.
2. ALL PIPE FITTINGS SHALL BE 1/2".

NOT TO SCALE

3 D-6

## PRESSURE GAGE AND SWITCH MOUNTING

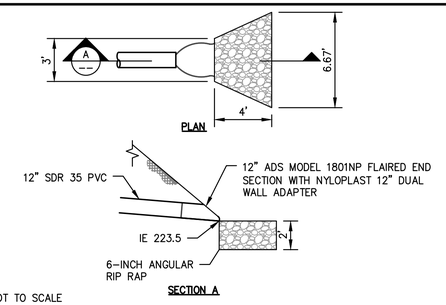


NOT TO SCALE

4 D-6

## DRAINAGE BASIN OUTFALL

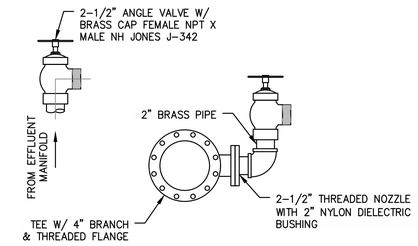


NOT TO SCALE

5 D-6

## WHARF HYDRANT

PLAN VIEW SHOWING QUARTER BEND TO BE USED WHEN MAKING A TURN.

QUARTER TURNS TO BE CONSTRUCTED TO FORM A SMOOTH FLOW LINE OF SAME SHAPE AND PATTERN AS BOTTOM WALL OF PIPE.

ALL STRAIGHT PIPE TO BE LAID THROUGH MANHOLES WITH TOP HALF REMOVED TO PROVIDE AT LEAST A 44" OPENING. ROUGH BROKEN EDGES SHALL BE MORTARED SMOOTH. THIS ALSO INCLUDES UPPER ENDS OF LINE MANHOLE.

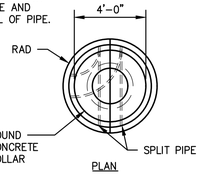


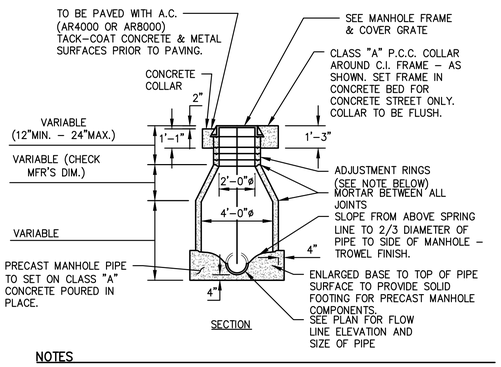


NOTES

1. PRECAST PIPE, ADJUSTMENT RINGS AND TAPERED SECTIONS SHALL BE CLASS II R.C.P. IN ACCORDANCE WITH ASTM C-478. ELLIPTICAL SINGLE LINE REINFORCEMENT WILL NOT BE PERMITTED. LINE MANHOLES WITH PVC (T-LOCK OR EQUAL).

FEET
0 2 4

6 D-6

## MANHOLE

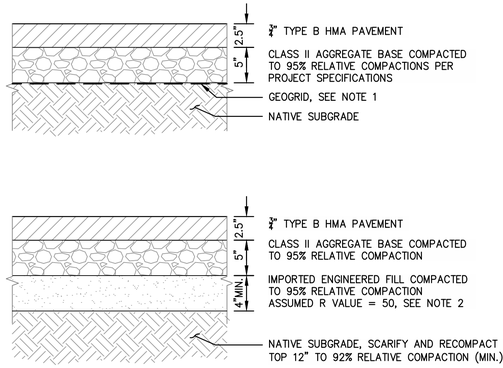


NOTES

1. CONTRACTOR SHALL PLACE GEOGRID, TENSAR BX1100 OR EQUIVALENT, UNDER PAVEMENT SECTION WITHIN THROAT OF ENTRY/EXIT DRIVE AND/OR WHERE THE DEPTH OF IMPORTED FILL IS LESS THAN 4".
2. CONTRACTOR MAY ALTER PAVEMENT SECTION WITH APPROVAL OF THE ENGINEER, IF TESTED R-VALUE OF IMPORTED SOIL EXCEEDS ASSUMED R-VALUE SHOWN HEREON.
3. CONTRACTOR SHALL USE BOTH SECTIONS OF PAVEMENT.
4. TI=5.0 (ASSUMED)

7 D-6

## HMA PAVEMENT

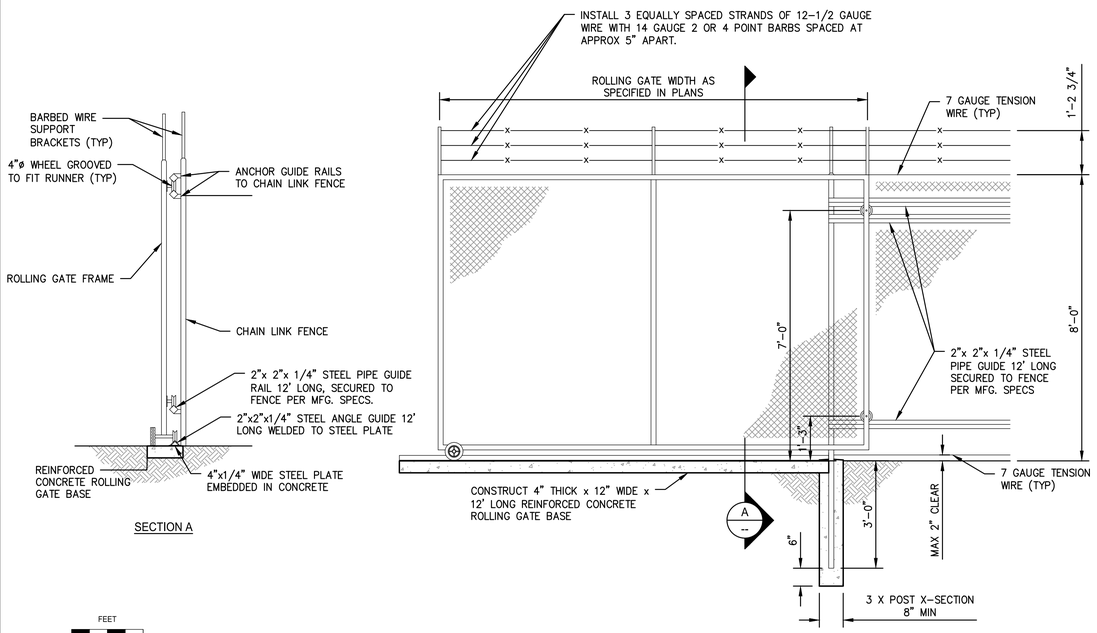


FEET
0 1 2

8 D-6

## ROLLING CHAIN LINK FENCE GATE

COPYRIGHT 2021 by PROVOST & PRITCHARD ENGINEERING GROUP, INC. ALL RIGHTS RESERVED
The firm of Provost & Pritchard Engineering Group, Inc. expressly reserves its property rights, including copyright, in these plans. These plans are not to be reproduced, changed, or copied in any form or manner whatsoever, nor are they to be assigned to a third party without first obtaining the written permission and consent of Provost & Pritchard Engineering Group, Inc. In the event of unauthorized reuse of these plans by a third party, the third party agrees to hold Provost & Pritchard Engineering Group, Inc. harmless, and shall indemnify Provost & Pritchard Engineering Group, Inc. for all loss, liability, damages, and costs, including but not limited to attorney's fees associated with defending and enforcing these rights.

BID ISSUE
10-12-2021

| No. | REVISION | BY | DATE |
|---|---|---|---|

REGISTERED PROFESSIONAL ENGINEER KEVIN M. BERRYHILL No. 70415 STATE OF CALIFORNIA
DATE SIGNED: 10/12/2021

1,2,3-TCP REMOVAL PROJECT FOR
CONEJO WELLS
CAMROSA WATER DISTRICT
CAMARILLO, CA

DETAILS

MISC DETAILS

EST. 1968
PROVOST& PRITCHARD CONSULTING GROUP
An Employee Owned Company
CLOVIS OFFICE
1234 H STREET, SUITE 201
CLOVIS, CA 93611-5921
559/449-2700 FAX 559/449-2715
https://provostandpritchard.com

DESIGN ENGINEER: KEVIN BERRYHILL
LICENSE NO: 70415
DRAFTED BY: JB | CHECKED BY: RKB
DATE: 10/11/2021
JOB NO: 295820002
PROJECT NO: 295820002
PHASE:
0 1"
ORIGINAL SCALE SHOWN IS ONE INCH. ADJUST SCALE FOR REDUCED OR ENLARGED PLANS.
SHEET D-6
22 OF 54

10/12/2021 9:42 AM \\ppeng.com\pzdata\Clients\Camrosa Water District-2958\295820002-Camrosa GAC Design Project\300 CAD\340 Sheet Sets\04_Civil_Details\D-6 MISC DETAILS.dwg -Michael McConnell

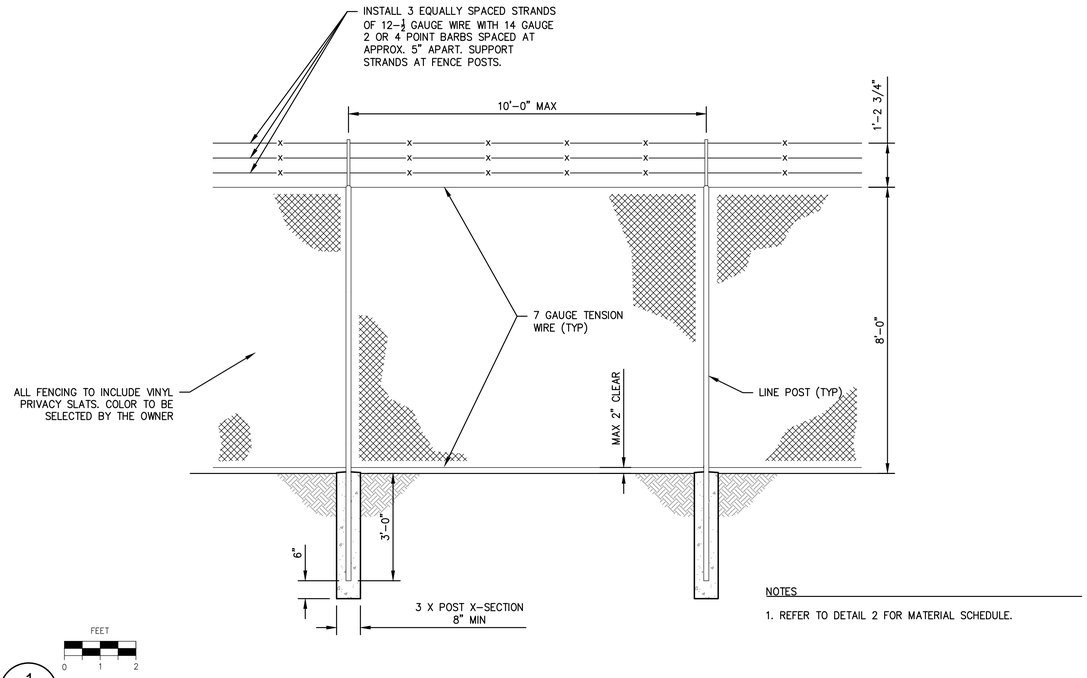


NOTES

1. REFER TO DETAIL 2 FOR MATERIAL SCHEDULE.

1 / D–7

## CHAIN LINK FENCE

| FENCE AND POST SCHEDULE | | | |
|---|---|---|---|
| HEIGHT | LOCATION | NOMINAL ID | WEIGHT LB/FT |
| 6'–0" AND LESS | LINE POST | 1–1/2" | 2.71 |
| | END, LATCH & CORNER POST | 2" | 3.65 |
| | BRACES | 1–1/4" | 2.27 |
| | FABRIC | 11 GAUGE | |
| OVER 6'–0" | LINE POST | 2" | 3.65 |
| | END, LATCH & CORNER POST | 2–1/2" | 5.79 |
| | BRACES | 1–1/4" | 2.27 |
| | FABRIC | 9 GAUGE | |

| GATE POST SCHEDULE | | | |
|---|---|---|---|
| HEIGHT | GATE WIDTH | NOMINAL ID | WEIGHT LB/FT |
| 6'–0" AND LESS | UP TO 6' | 2–1/2" | 5.79 |
| | 6' TO 12' | 4" | 10.79 |
| | 12' TO 18' | 5" | 14.62 |
| | 18' TO 24' | 6" | 18.97 |
| OVER 6'–0" | UP TO 6' | 3" | 7.58 |
| | 6' TO 12' | 5" | 14.62 |
| | 12' TO 18' | 6" | 18.97 |
| | 18' TO 24' | 8" | 28.55 |

NOTES

1. LINE POST SPACING SHALL BE 10' MAX.
2. ALL FENCE AND GATE HARDWARE TO BE GALVANIZED.
3. VERTICAL STAYS REQUIRED FOR GATES WIDER THAN 6'.

2 / D–7

## CHAIN LINK FENCE NOTES

30–FOOT GATE OPENING. EQUIP GATE WITH ALL–O–MATIC SL–100DC–FP GATE CLOSER WITH LIFT MASTER 850LM TRANCEIVER.

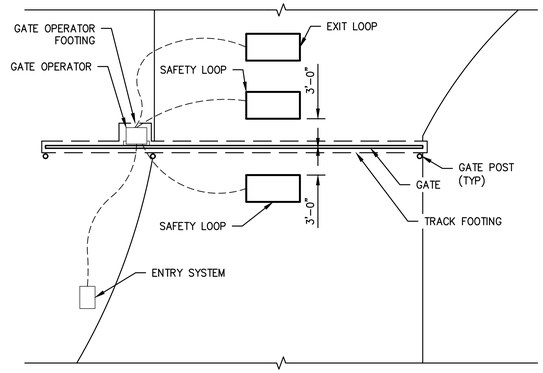


NOT TO SCALE

5 / D–7

## 30' ENTRANCE AUTOMATIC CANTILEVER SLIDE GATE

FN–0142

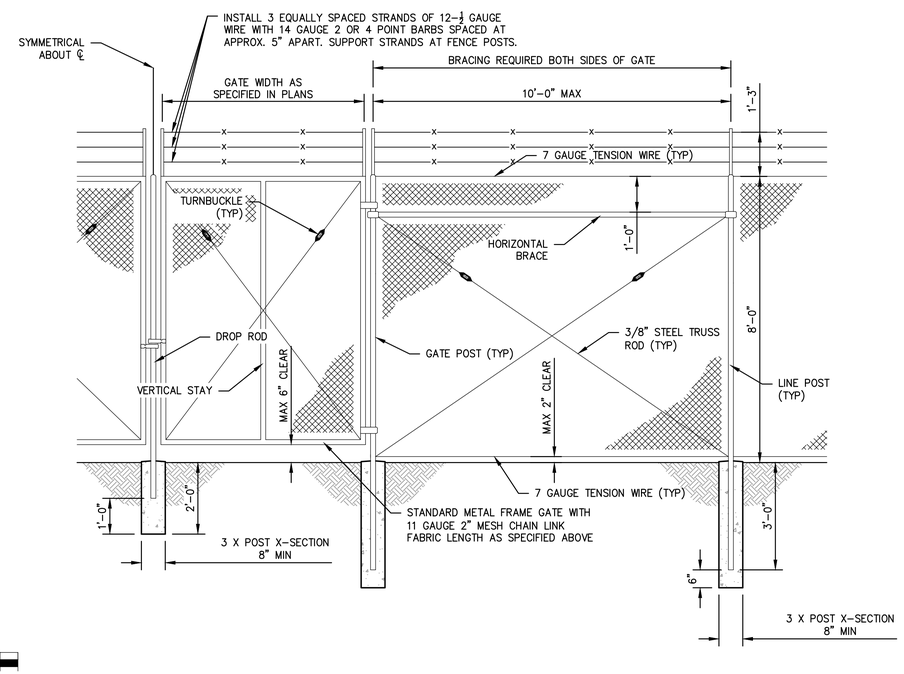


3 / D–7

## CHAIN LINK FENCE DOUBLE GATE

FN–0141

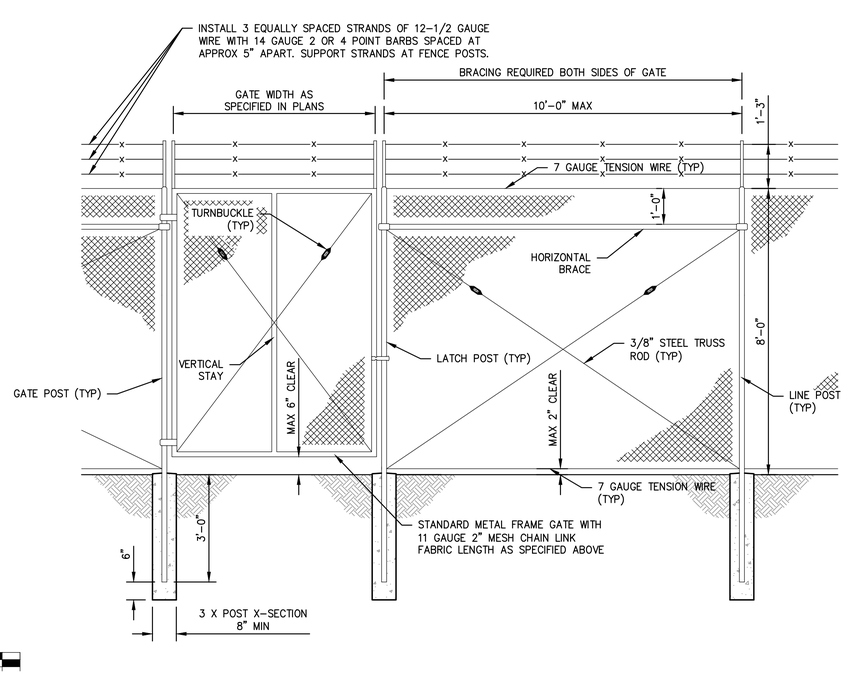


4 / D–7

## CHAIN LINK FENCE SINGLE GATE

COPYRIGHT 2021 by PROVOST & PRITCHARD ENGINEERING GROUP, INC. ALL RIGHTS RESERVED
The firm of Provost & Pritchard Engineering Group, Inc. expressly reserves its property rights, including copyright and other applicable property rights in these plans. These plans are not to be reproduced, changed, or copied in any form or manner whatsoever, nor are they to be assigned to a third party without first obtaining the expressed written permission and consent of Provost & Pritchard Engineering Group, Inc. In the event of unauthorized reuse of these plans by a third party, Provost & Pritchard Engineering Group, Inc. shall be indemnified, defended, and held harmless by the third party for any and all liability, claims, losses, fees of any kind or nature, including attorney's fees associated with defending and enforcing these rights.

| No. | REVISION | BY | DATE |
|---|---|---|---|
| | BID ISSUE 10-12-2021 | | |

REGISTERED PROFESSIONAL ENGINEER KEVIN M BERRYHILL No. 70415 STATE OF CALIFORNIA

DATE SIGNED: 10/12/2021

1,2,3–TCP REMOVAL PROJECT FOR CONEJO WELLS CAMROSA WATER DISTRICT CAMARILLO, CA

DETAILS

FENCE DETAILS

EST. 1963 PROVOST & PRITCHARD CONSULTING GROUP
An Employee Owned Company
455 W FIR AVENUE
CLOVIS, CALIFORNIA 93611
559.449.2700 FAX 559.449.2715
https://provostandpritchard.com/

DESIGN ENGINEER: KEVIN BERRYHILL
LICENSE NO: 70415
DRAFTED BY: JB | CHECKED BY: RKB
DATE: 10/11/2021
JOB NO: 295820002
PROJECT NO: 295820002
PHASE:
0 1"
ORIGINAL SCALE SHOWN IS ONE INCH. ADJUST SCALE FOR REDUCED OR ENLARGED PLANS.
SHEET D-7
23 OF 54

10/12/2021 9:43 AM \\pperg.com\pzdata\clients\Camrosa Water District–295820002–Camrosa GAC Design Project\300 CAD\340 Sheet Sets\04_Civil_Details\D–7 FENCE DETAILS.dwg –Michael McConnell

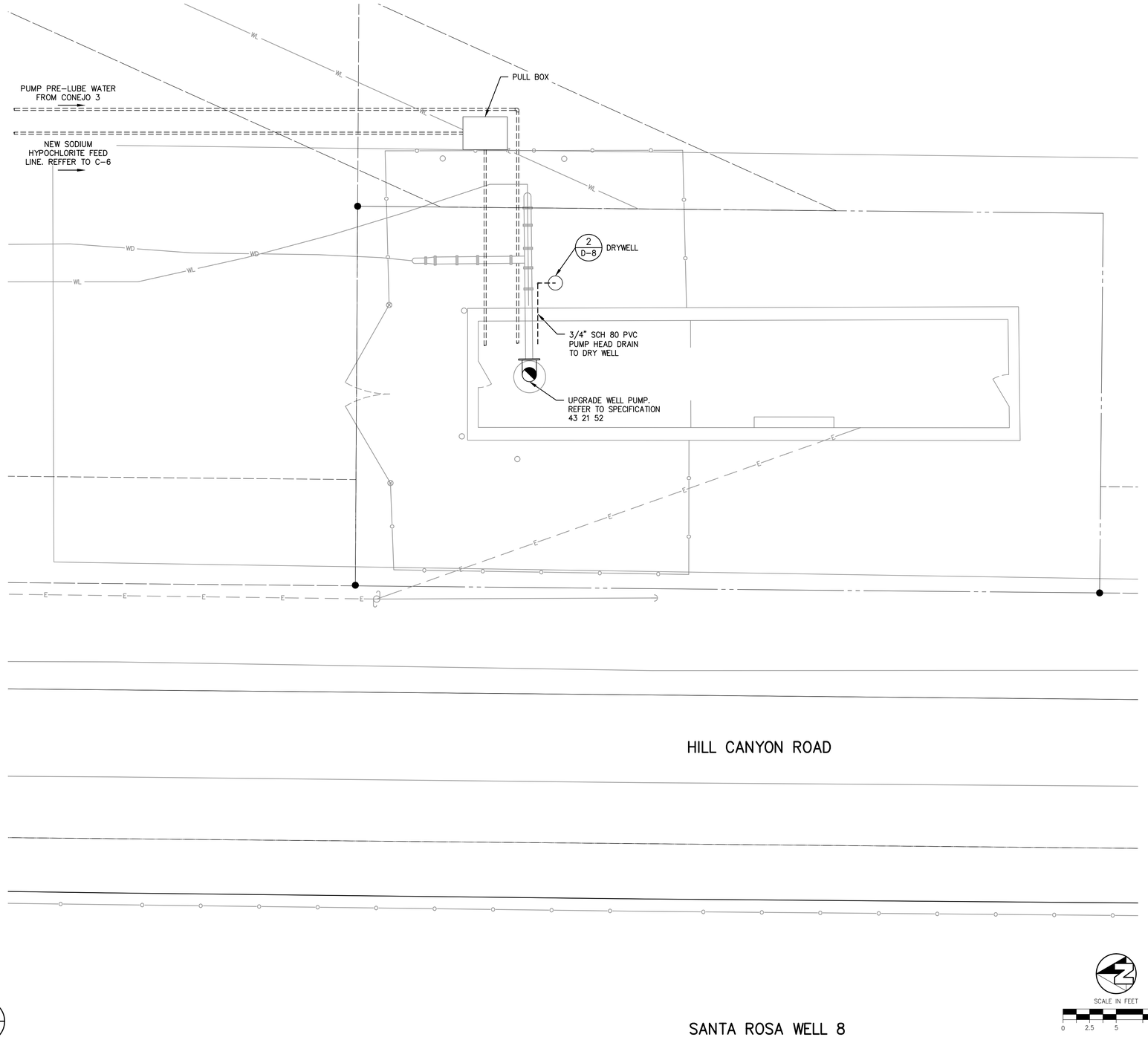


1
D-8

SANTA ROSA WELL 8

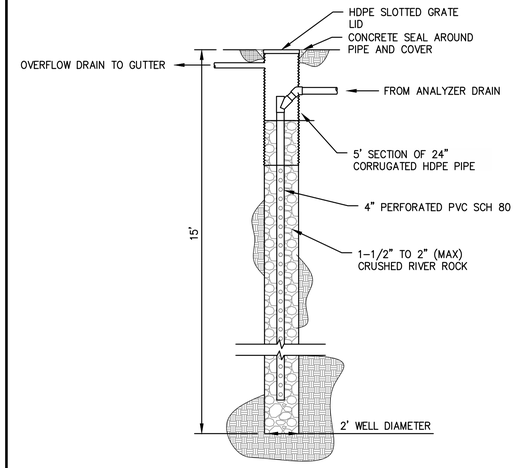


GENERAL NOTES

1. NO EXCAVATION SHALL EXTEND WITHIN 10 FEET OF THE WATER TABLE.

NOT TO SCALE

2
D-8

DRYWELL

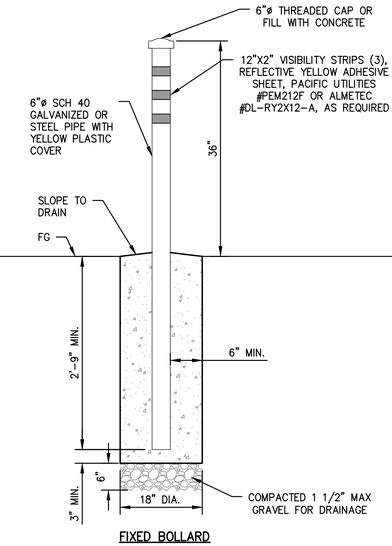


FIXED BOLLARD

NOT TO SCALE

3
D-8

BOLLARD

COPYRIGHT 2021 by PROVOST & PRITCHARD ENGINEERING GROUP, INC. ALL RIGHTS RESERVED
The firm of Provost & Pritchard Engineering Group, Inc. expressly reserves its property rights, including copyright and other applicable property rights in these plans. These plans are not to be reproduced, changed, or copied in any form or manner whatsoever, nor are they to be assigned to a third party without first obtaining the express written permission and consent of Provost & Pritchard Engineering Group, Inc. In the event of unauthorized reuse of these plans by a third party, Provost & Pritchard Engineering Group, Inc. and its consultants shall be indemnified, held harmless, and shall be paid reasonable attorney's fees by the third party. Provost & Pritchard Engineering Group, Inc. shall have no legal liability whatsoever associated with defending and enforcing these rights.

| No. | REVISION | BY | DATE |
|---|---|---|---|

BID ISSUE
10-12-2021

REGISTERED PROFESSIONAL ENGINEER KEVIN M. BERRYHILL No. 70415 STATE OF CALIFORNIA

DATE SIGNED: 10/12/2021

1,2,3-TCP REMOVAL PROJECT FOR
CONEJO WELLS
CAMROSA WATER DISTRICT
CAMARILLO, CA

DETAILS

SANTA ROSA WELL 8 DETAILS

EST. 1963
PROVOST& PRITCHARD CONSULTING GROUP
An Employee Owned Company
1000 KIA AVENUE, SUITE 100
CLOVIS, CA 93611
559.449.2700 FAX 559.449.2715
https://provostandpritchard.com/

DESIGN ENGINEER: KEVIN BERRYHILL
LICENSE NO: 70415

| DRAFTED BY: | CHECKED BY: |
|---|---|
| JB | RKB |

DATE: 10/11/2021
JOB NO: 295820002
PROJECT NO: 295820002
PHASE:

0 1"
ORIGINAL SCALE SHOWN IS ONE INCH. ADJUST SCALE FOR REDUCED OR ENLARGED PLANS.

SHEET D-8
24 OF 54

10/12/2021 9:44 AM \\ppeng.com\gzdata\clients\Camrosa Water District-295B\295820002-Camrosa GAC Design Project\300 CAD\340 Sheet Sets\04_Civil_Details\D-8 SANTA ROSA WELL 8 DETAILS.dwg -Michael McConnell

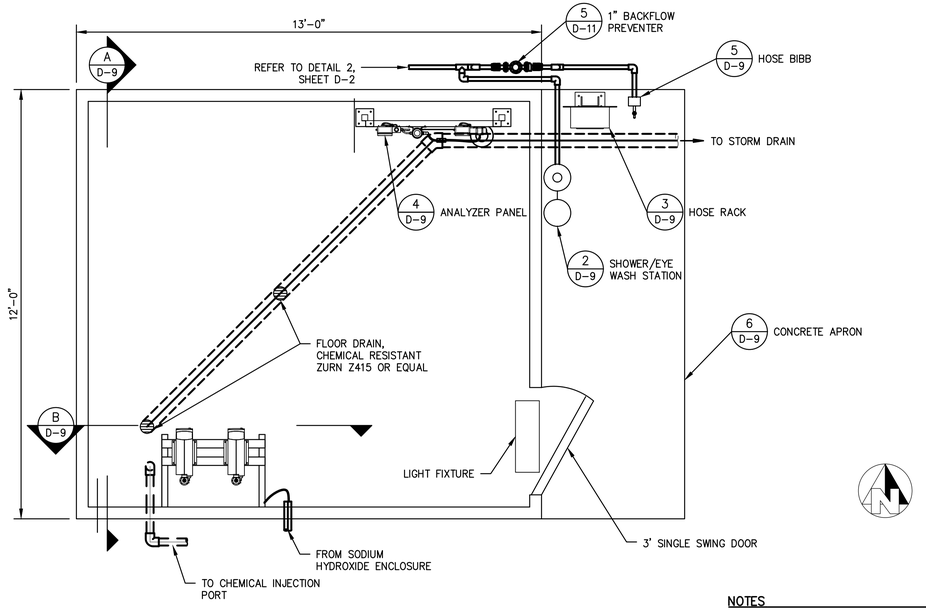


NOTES

1. REFER TO SHEETS D-20 AND D-21 FOR ENCLOSURE STRUCTURAL AND FRAMING DETAILS.

1 D-9 ANALYZER BUILDING PLAN

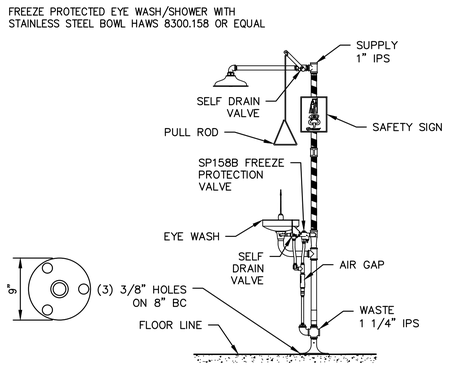


NOT TO SCALE

2 D-9 EMERGENCY EYE WASH & SHOWER

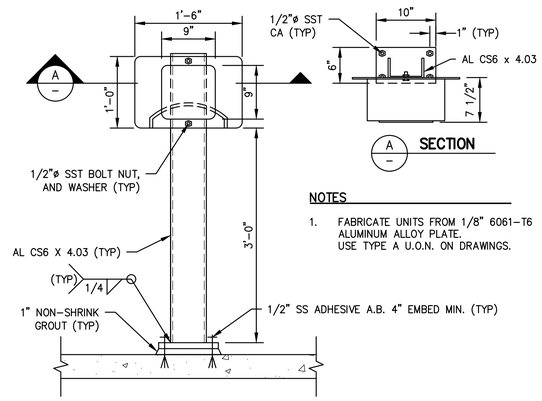


NOTES

1. FABRICATE UNITS FROM 1/8" 6061-T6 ALUMINUM ALLOY PLATE. USE TYPE A U.O.N. ON DRAWINGS.

NOT TO SCALE

3 D-9 FLOOR MOUNTED HOSE RACK

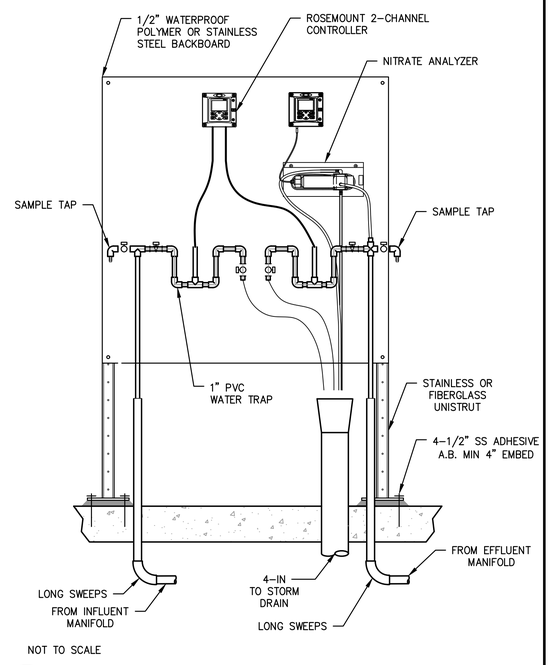


NOT TO SCALE

4 D-9 ANALYZER PANEL

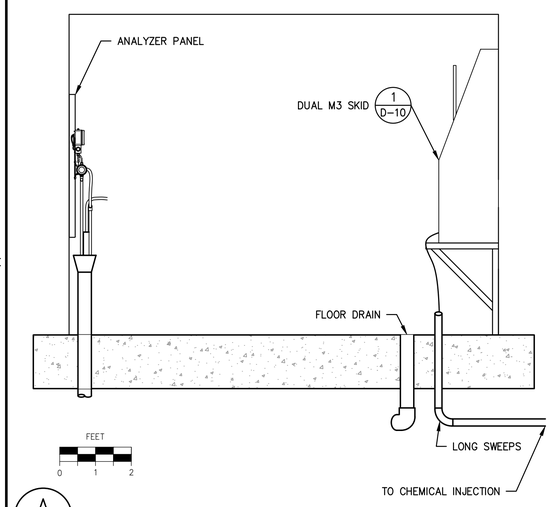


A D-9 SECTION A

NOTES

1. SUPPORT METERING PUMP SKID USING 1-5/8" STAINLESS STEEL OR FIBERGLASS UNISTRUT.

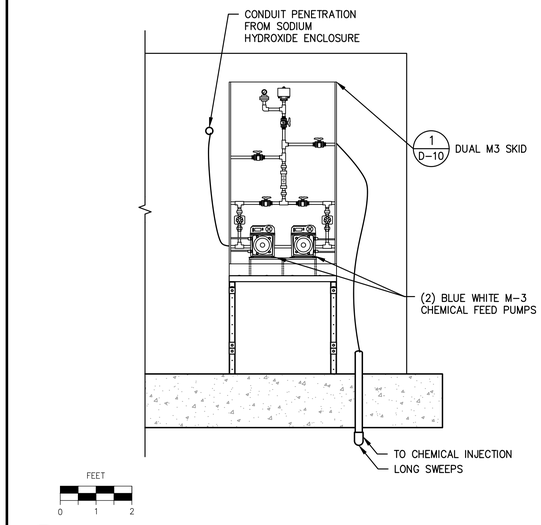


B D-9 SECTION B

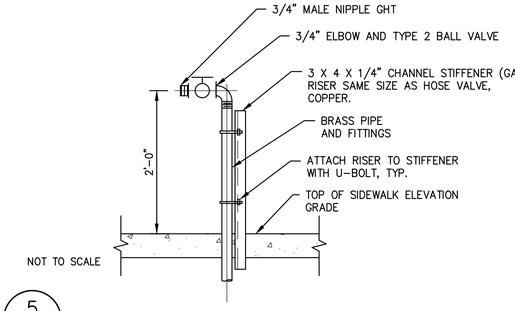


NOT TO SCALE

5 D-9 HOSE BIBB

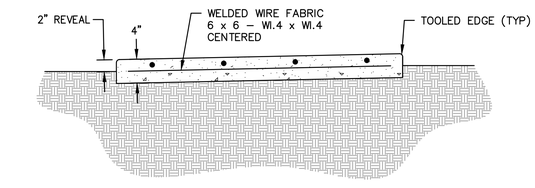


NOT TO SCALE

6 D-9 4' CONCRETE WALKWAY

COPYRIGHT 2021 by PROVOST & PRITCHARD ENGINEERING GROUP, INC. ALL RIGHTS RESERVED
The firm of Provost & Pritchard Engineering Group, Inc. expressly reserves its property rights, including copyright and other applicable property rights in these plans. These plans are not to be reproduced, changed, or copied in any form or manner whatsoever, nor are they to be assigned to a third party without first obtaining the express written authorization and consent of Provost & Pritchard Engineering Group, Inc. In the event of unauthorized reuse of these plans by a third party, Provost & Pritchard Engineering Group, Inc. shall be indemnified, defended and held harmless by the third party for any and all claims, liabilities, and losses arising out of or resulting from the unauthorized reuse of these plans. In addition, the third party shall pay for any and all costs Provost & Pritchard Engineering Group, Inc. incurs in enforcing these rights.

BID ISSUE
10-12-2021

| No. | REVISION | BY | DATE |
|---|---|---|---|

REGISTERED PROFESSIONAL ENGINEER KEVIN M. BERRYHILL No. 70415 STATE OF CALIFORNIA

DATE SIGNED: 10/12/2021

1,2,3-TCP REMOVAL PROJECT FOR
CONEJO WELLS
CAMROSA WATER DISTRICT
CAMARILLO, CA

DETAILS

ANALYZER BUILDING DETAILS

EST. 1968 PROVOST & PRITCHARD CONSULTING GROUP
An Employee Owned Company
430 W. FIR AVENUE
CLOVIS, CALIFORNIA 93611
559 449-2700 FAX 559 449-2715
https://provostandpritchard.com

DESIGN ENGINEER: KEVIN BERRYHILL
LICENSE NO: 70415
DRAFTED BY: JB
CHECKED BY: RKB
DATE: 10/11/2021
JOB NO: 295820002
PROJECT NO: 295820002
PHASE:

ORIGINAL SCALE SHOWN IS ONE INCH. ADJUST SCALE FOR REDUCED OR ENLARGED PLANS.

SHEET D-9

25 OF 54

10/12/2021 9:45 AM \\ppeng.com\prjdata\clients\Camrosa Water District-2958\295820002-Camrosa GAC Design Project\300 CAD\340 Sheet Sets\04_Civil_Details\D-9 EQUIPMENT ENCLOSURE DETAILS.dwg – Michael McConnell

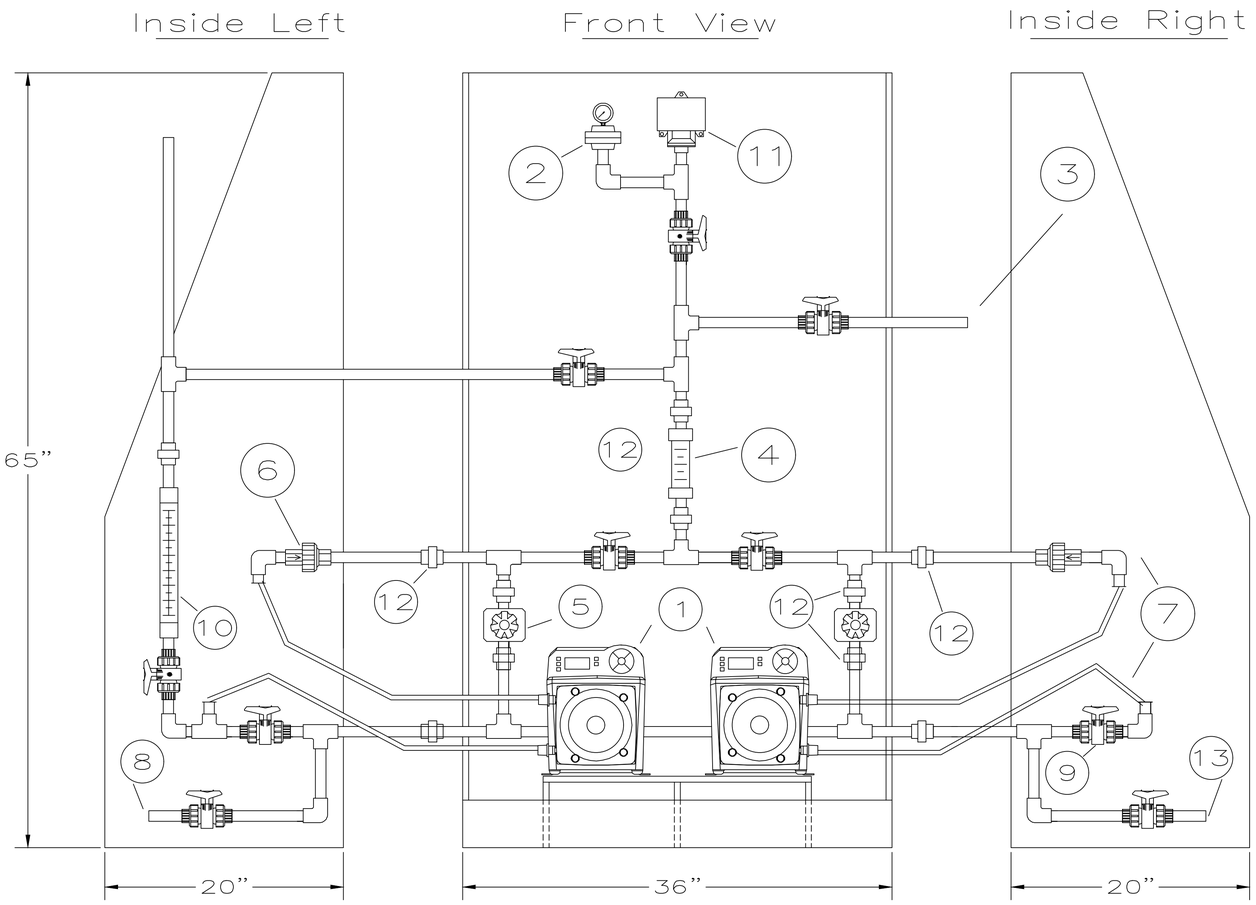


1 Metering Pump
2 Pressure Gauge
3 Discharge
4 Site Flow Indicator
5 Pressure Relief Valve
6 Diaphragm Check Valve
7 3/8” Flexible Tubing
8 Suction Inlet
9 1/2” Ball Valve
10 Calibration Cylinder
11 Pressure Switch
12 Union
13 Drain

NOT TO SCALE

1
D-10

DUAL M3 SKID

COPYRIGHT 2021 by PROVOST & PRITCHARD ENGINEERING GROUP, INC. ALL RIGHTS RESERVED
The firm of Provost & Pritchard Engineering Group, Inc. expressly reserves its property rights, including copyright and other applicable property rights in these plans. These plans are not to be reproduced, changed, or copied in any form or manner whatsoever, nor are they to be assigned to a third party without first obtaining the written permission and consent of Provost & Pritchard Engineering Group, Inc. In the event of unauthorized reuse of these plans by a third party, Provost & Pritchard Engineering Group, Inc. shall be indemnified and held harmless by such third party. Provost & Pritchard Engineering Group, Inc. reserves all legal fees associated with defending and enforcing these rights.

BID ISSUE
10-12-2021

| No. | REVISION | BY | DATE |
|---|---|---|---|

REGISTERED PROFESSIONAL ENGINEER KEVIN BERRYHILL No. 70415 STATE OF CALIFORNIA

DATE SIGNED: 10/12/2021

1,2,3-TCP REMOVAL PROJECT FOR
CONEJO WELLS
CAMROSA WATER DISTRICT
CAMARILLO, CA

DETAILS

DUAL M3 SKID

EST. 1968 PROVOST& PRITCHARD CONSULTING GROUP
An Employee Owned Company
455 W FIR AVENUE
CLOVIS, CALIFORNIA 93611
559.449.2700 FAX 559.449.2715
https://provostandpritchard.com/

DESIGN ENGINEER: KEVIN BERRYHILL
LICENSE NO: 70415
DRAFTED BY: JB
CHECKED BY: RKB
DATE: 10/11/2021
JOB NO: 295820002
PROJECT NO: 295820002
PHASE:
0 1”
ORIGINAL SCALE SHOWN IS ONE INCH. ADJUST SCALE FOR REDUCED OR ENLARGED PLANS.
SHEET D-10
26 OF 54

10/12/2021 9:45 AM \\ppeng.com\pzdata\clients\Camrosa Water District-295820002-Camrosa GAC Design Project\300 CAD\340 Sheet Sets\04_Civil_Details\D-10 DUAL M3 SKID.dwg –Michael McConnell

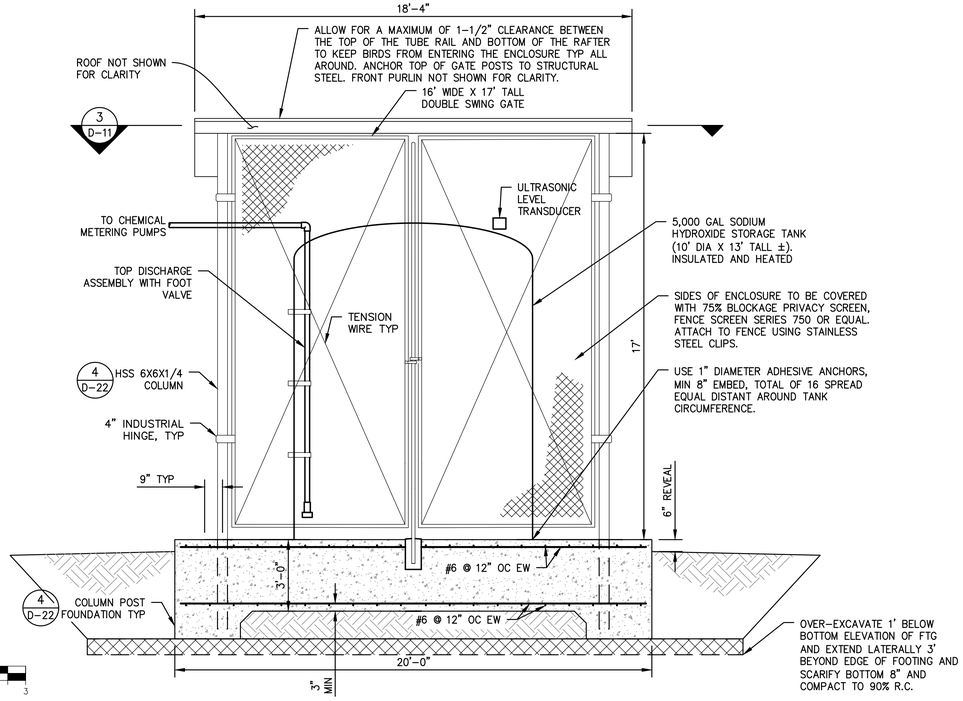


1 D-11

## SODIUM HYDROXIDE ENCLOSURE

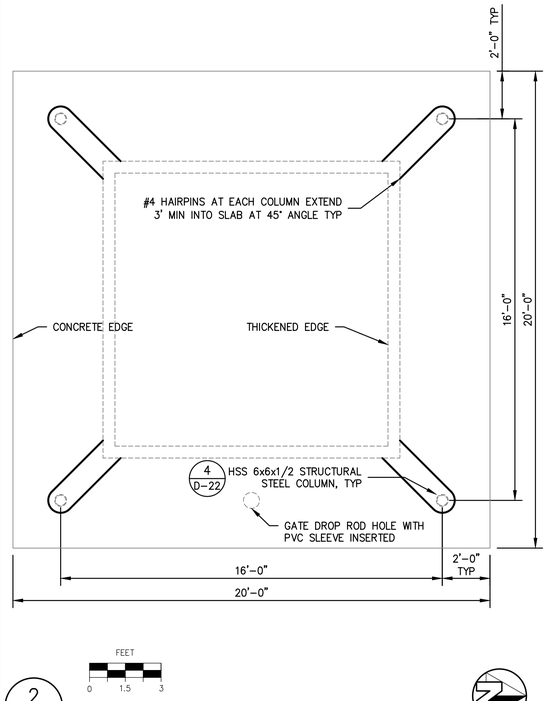


2 D-11

## ENCLOSURE FLOOR PLAN

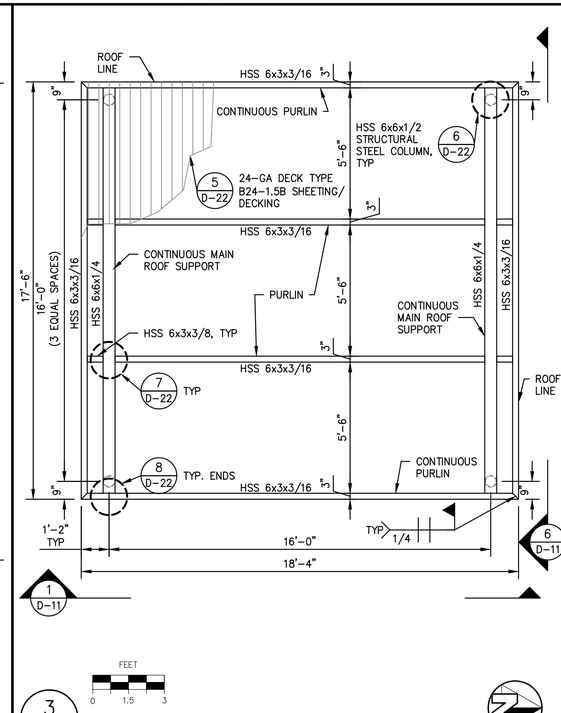


3 D-11

## ENCLOSURE ROOF PLAN

| CHEMICAL TANK MATERIAL LIST | |
|---|---|
| ID | DESCRIPTION |
| 1 | SUCTION LINE |
| 2 | FILL LINE |
| 3 | DRAIN/OVERFLOW LINE |
| 4 | LEVEL INDICATOR |

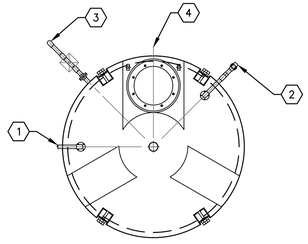


NOTES

1. TANK SHALL BE EQUIPPED WITH ULTRASONIC LEVEL TRANSMITTER. LOCATE ON TOP OF TANK AS CONVENIENT FOR CONDUIT ROUTING
2. TANK SHALL INCLUDE ELECTRIC HEAT TRACING AND INSULATION

FEET
0 2 4

4 D-11

## SODIUM HYDROXIDE NOZZLE ORIENTATION

WT-0701

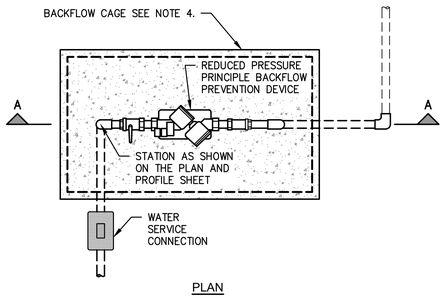


PLAN

NOTES

1. ALL BRASS PIPE AND FITTINGS BELOW GRADE TO BE PRIMED AND WRAPPED WITH A 50 PERCENT OVERLAP OF 10 MIL CORROSION PROTECTION TAPE. (SCOTCHRAP OR EQUAL)
2. BACK FLOW PREVENTER MUST BE TESTED AND CERTIFIED; TESTER REPORT SUBMITTED TO OWNER.
3. REDUCED PRESSURE PRINCIPAL BACKFLOW PREVENTION DEVICE: FEBCO SERIES LF825Y, OR LEAD-FREE EQUAL APPROVED BY THE STATE OF CALIFORNIA.
4. BACKFLOW CAGE WITH SLIP-ON INSULATING COVER:
   - 4.1. 1 INCH: STRONGBOX #SBBC-22CR POWDER COATED BLACK, PBB-22 COVER.
   - 4.2. 2 INCH: STRONGBOX #SBBC-45CR POWDER COATED BLACK, PBB-45 COVER.

NOT TO SCALE

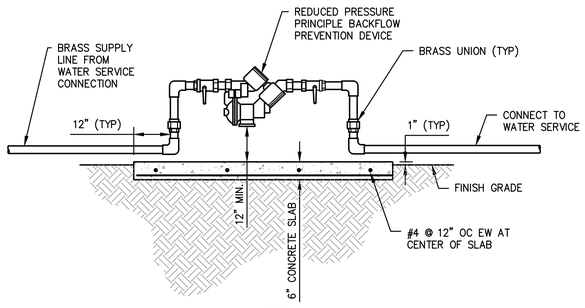


TYPE 1
SECTION A-A (ABOVE GROUND)

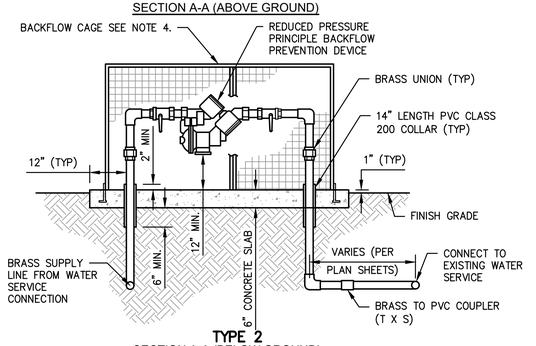


TYPE 2
SECTION A-A (BELOW GROUND)

5 D-11

## BACKFLOW PREVENTER

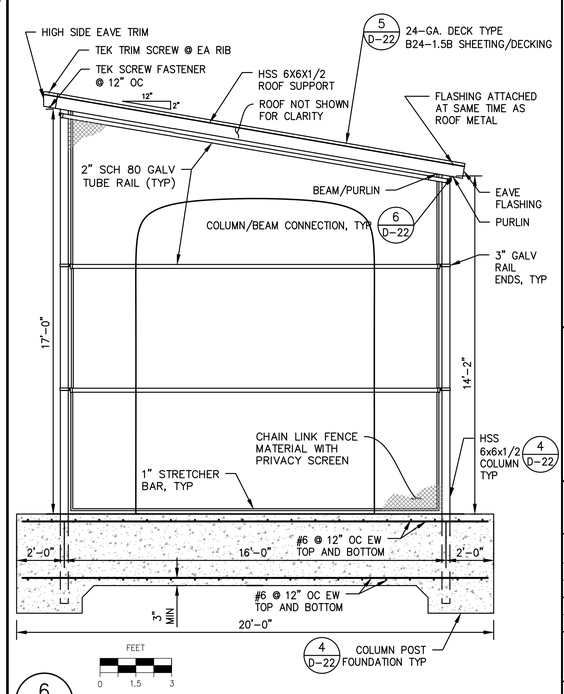


6 D-11

## ENCLOSURE SIDE ELEVATION

COPYRIGHT 2021 by PROVOST & PRITCHARD ENGINEERING GROUP, INC. ALL RIGHTS RESERVED
The firm of Provost & Pritchard Engineering Group, Inc. expressly reserves its property rights, including copyright and other applicable property rights in these plans. These plans are not to be reproduced, changed, or copied in any form or manner whatsoever nor are they to be assigned to a third party without first obtaining the expressed written permission and consent of Provost & Pritchard Engineering Group, Inc. In the event of unauthorized reuse of these plans by a third party, Provost & Pritchard Engineering Group, Inc. shall be indemnified and held harmless by such third party for any and all liabilities, claims, and losses arising out of or resulting from such unauthorized reuse. Any legal fees associated with defending and enforcing these rights.

| No. | REVISION | BY | DATE |
|---|---|---|---|

BID ISSUE
10-12-2021




DATE SIGNED: 10/12/2021

1,2,3-TCP REMOVAL PROJECT FOR CONEJO WELLS
CAMROSA WATER DISTRICT
CAMARILLO, CA

DETAILS

# CHEMICAL ENCLOSURE DETAILS

PROVOST & PRITCHARD CONSULTING GROUP
EST. 1963
An Employee Owned Company
286 W. CROMWELL AVE.
CLOVIS, CA 93611
559.449.2700 FAX 559.449.2715
https://provostandpritchard.com/

DESIGN ENGINEER: KEVIN BERRYHILL
LICENSE NO: 70415
DRAFTED BY: JB
CHECKED BY: RKB
DATE: 10/11/2021
JOB NO: 295820002
PROJECT NO: 295820002
PHASE:
0 1"
ORIGINAL SCALE SHOWN IS ONE INCH. ADJUST SCALE FOR REDUCED OR ENLARGED PLANS.

SHEET D-11
27 OF 54

10/12/2021 9:47 AM \\ppeng.com\ppdata\clients\Camrosa Water District-295820002-Camrosa GAC Design Project\300 CAD\340 Sheet Sets\04_Civil_Details\D-10 EQUIPMENT ENCLOSURE DETAILS.dwg —Michael McConnell

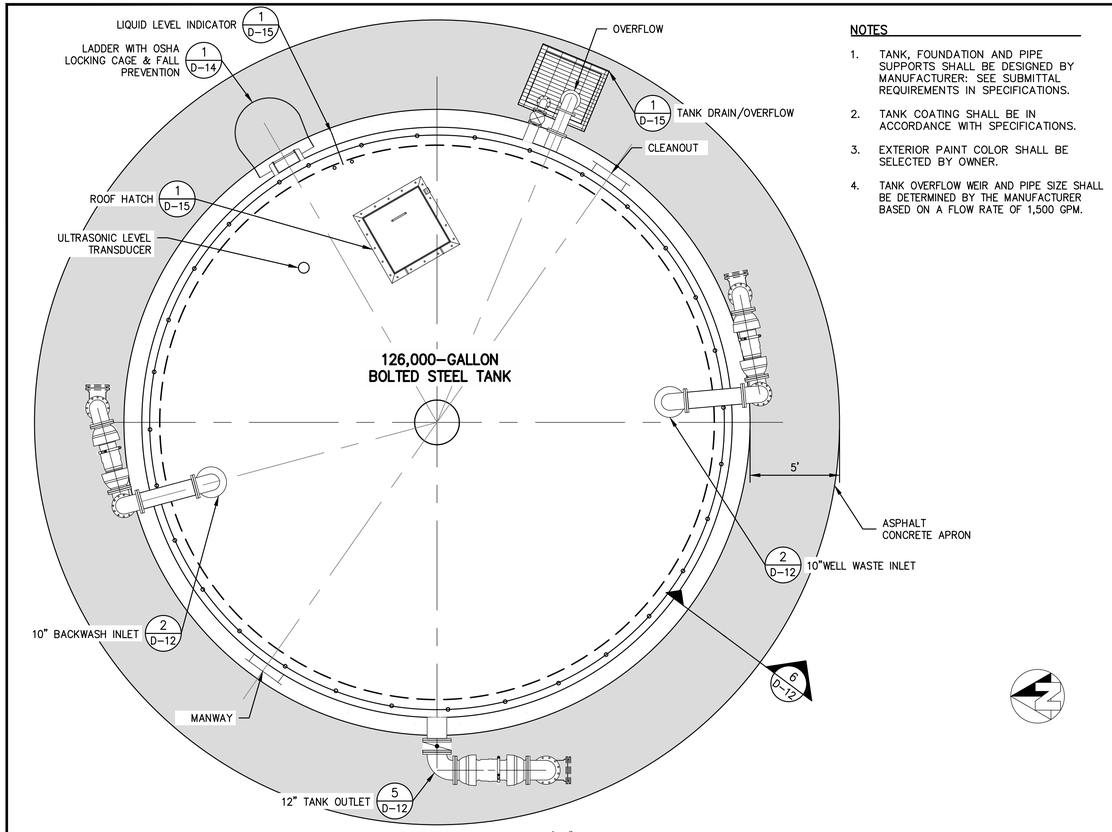


NOTES

1. TANK, FOUNDATION AND PIPE SUPPORTS SHALL BE DESIGNED BY MANUFACTURER: SEE SUBMITTAL REQUIREMENTS IN SPECIFICATIONS.
2. TANK COATING SHALL BE IN ACCORDANCE WITH SPECIFICATIONS.
3. EXTERIOR PAINT COLOR SHALL BE SELECTED BY OWNER.
4. TANK OVERFLOW WEIR AND PIPE SIZE SHALL BE DETERMINED BY THE MANUFACTURER BASED ON A FLOW RATE OF 1,500 GPM.

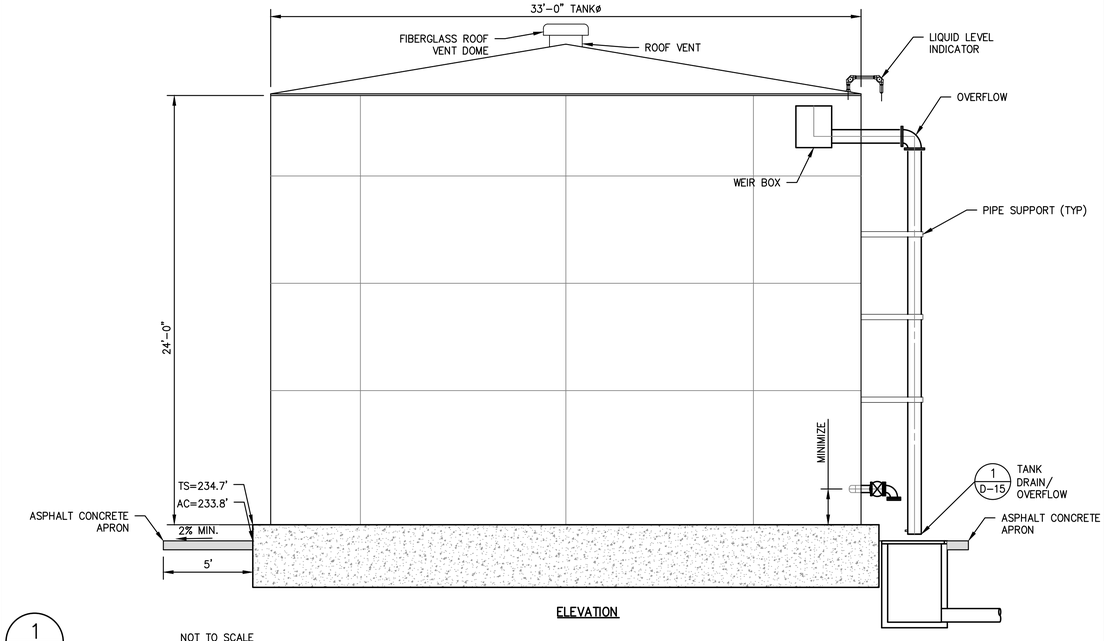


ELEVATION

NOT TO SCALE

1 D-12

## BACKWASH TANK

NOTES

1. PIPE SUPPORTS SHALL BE DESIGNED BY MANUFACTURER: SEE SUBMITTAL REQUIREMENTS IN SPECIFICATIONS.
2. AIR GAP INLET SHALL PROVIDE AT LEAST TWO PIPE DIAMETERS CLEARANCE BETWEEN PIPE AND TOP OF TANK. PROVIDE 24 MESH SCREEN AROUND AIR GAP.

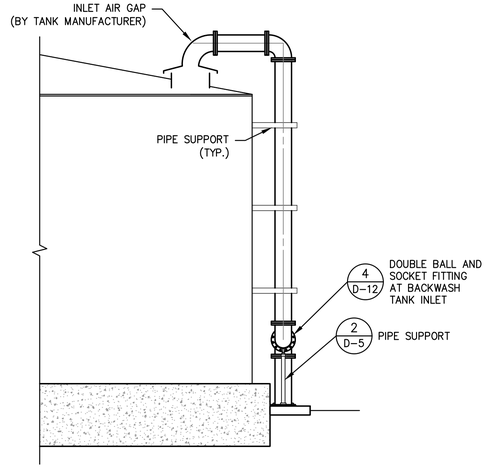


NOT TO SCALE

2 D-12

## TANK INLET AIR GAP

NOTES

1. CENTER OVERFLOW OVER CATCH BASIN.

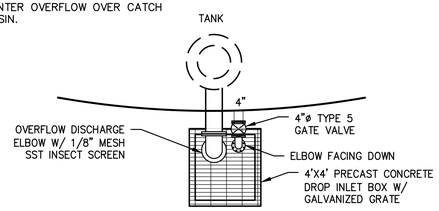


NOT TO SCALE

3 D-12

## TANK DRAIN/OVERFLOW

NOTE

1. WOOD SHALL BE REDWOOD NO. 2 GRADE OR BETTER, OR PRESSURE TREATED FIR NO. 2 OR BETTER

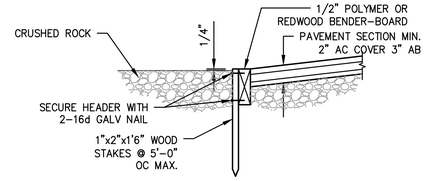


NOT TO SCALE

6 D-12

## WOOD HEADER

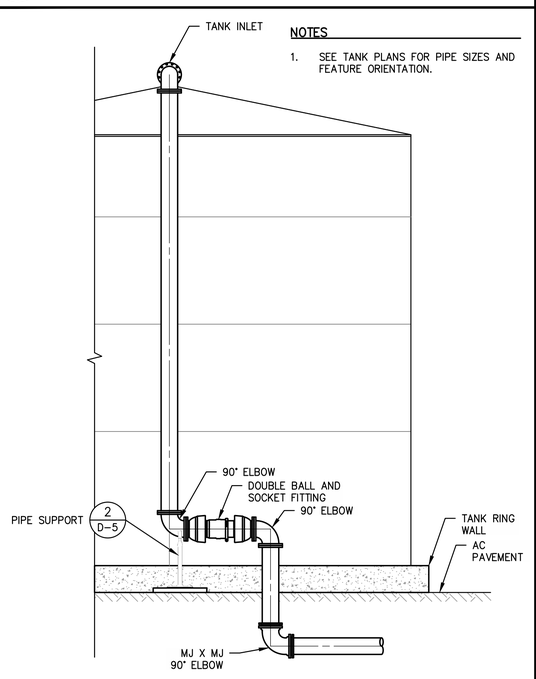


NOT TO SCALE

4 D-12

## DOUBLE BALL AND SOCKET FITTING AT BACKWASH TANK INLET

NOTES

1. SEE TANK PLANS FOR PIPE SIZES.

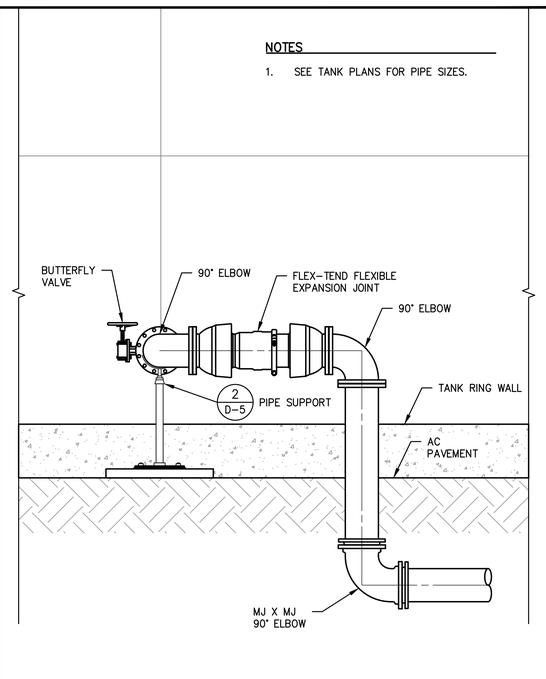


NOT TO SCALE

5 D-12

## DOUBLE BALL AND SOCKET FITTING AT TANK OUTLET

COPYRIGHT 2021 by PROVOST & PRITCHARD ENGINEERING GROUP, INC. ALL RIGHTS RESERVED
The firm of Provost & Pritchard Engineering Group, Inc. expressly reserves its property rights, including copyright and other applicable property rights in these plans. These plans are not to be reproduced, changed, or copied in any form or manner whatsoever, nor are they to be assigned to a third party without first obtaining the expressed written permission and consent of Provost & Pritchard Engineering Group, Inc. In the event of unauthorized reuse of these plans by a third party, Provost & Pritchard Engineering Group, Inc. shall be indemnified, held harmless, and shall be paid all legal fees associated with defending and enforcing these rights.

| No. | REVISION | BY | DATE |
|---|---|---|---|

BID ISSUE
10-12-2021

REGISTERED PROFESSIONAL ENGINEER KEVIN M. BERRYHILL No. 70415 STATE OF CALIFORNIA

DATE SIGNED: 10/12/2021

1,2,3-TCP REMOVAL PROJECT FOR
CONEJO WELLS
CAMROSA WATER DISTRICT
CAMARILLO, CA

DETAILS

BACKWASH TANK DETAILS

EST. 1963
PROVOST& PRITCHARD
CONSULTING GROUP
An Employee Owned Company
286 W. CROMWELL AVE
CLOVIS, CALIFORNIA 93611
559.449.2700 FAX 559.449.2715
https://provostandpritchard.com/

DESIGN ENGINEER: KEVIN BERRYHILL
LICENSE NO: 70415

| DRAFTED BY: | CHECKED BY: |
|---|---|
| JB | RKB |

DATE: 10/11/2021
JOB NO: 295820002
PROJECT NO: 295820002
PHASE:

0 1"
ORIGINAL SCALE SHOWN IS ONE INCH. ADJUST SCALE FOR REDUCED OR ENLARGED PLANS.

SHEET D-12
28 OF 54

10/12/2021 9:48 AM \\ppeng.com\prjdata\clients\Camrosa Water District-295820002-Camrosa GAC Design Project\300 CAD\340 Sheet Sets\04_Civil_Details\D-10 BACKWASH TANK DETAILS.dwg -Michael McConnell

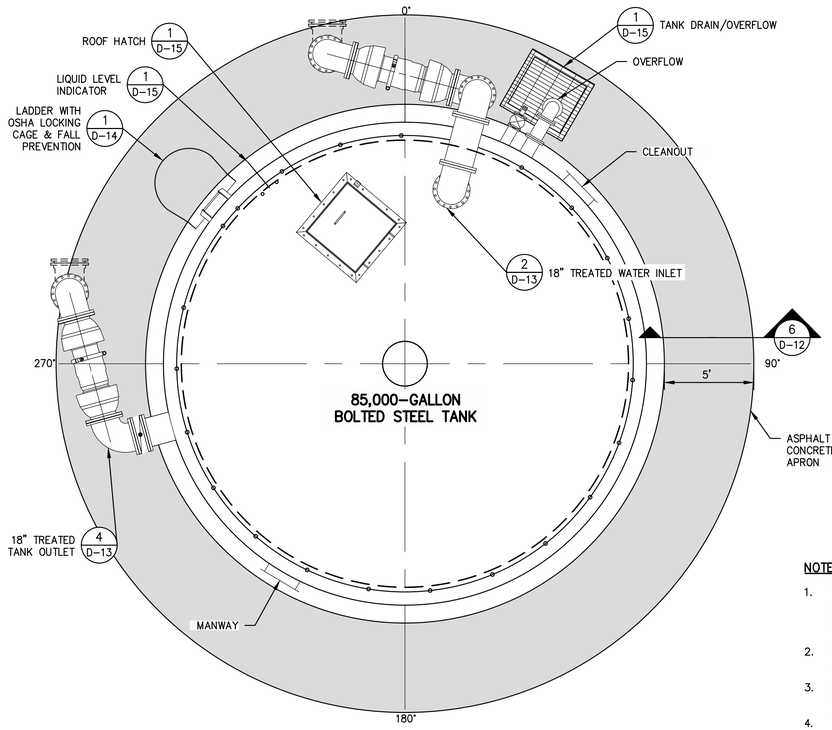


PLAN

NOTES

1. TANK, FOUNDATION AND PIPE SUPPORTS SHALL BE DESIGNED BY MANUFACTURER: SEE SUBMITTAL REQUIREMENTS IN SPECIFICATIONS.
2. TANK COATING SHALL BE IN ACCORDANCE WITH SPECIFICATIONS.
3. EXTERIOR PAINT COLOR SHALL BE SELECTED BY OWNER.
4. TANK OVERFLOW WEIR AND PIPE SIZE SHALL BE DETERMINED BY THE MANUFACTURER BASED ON A FLOW RATE OF 3,150 GPM.

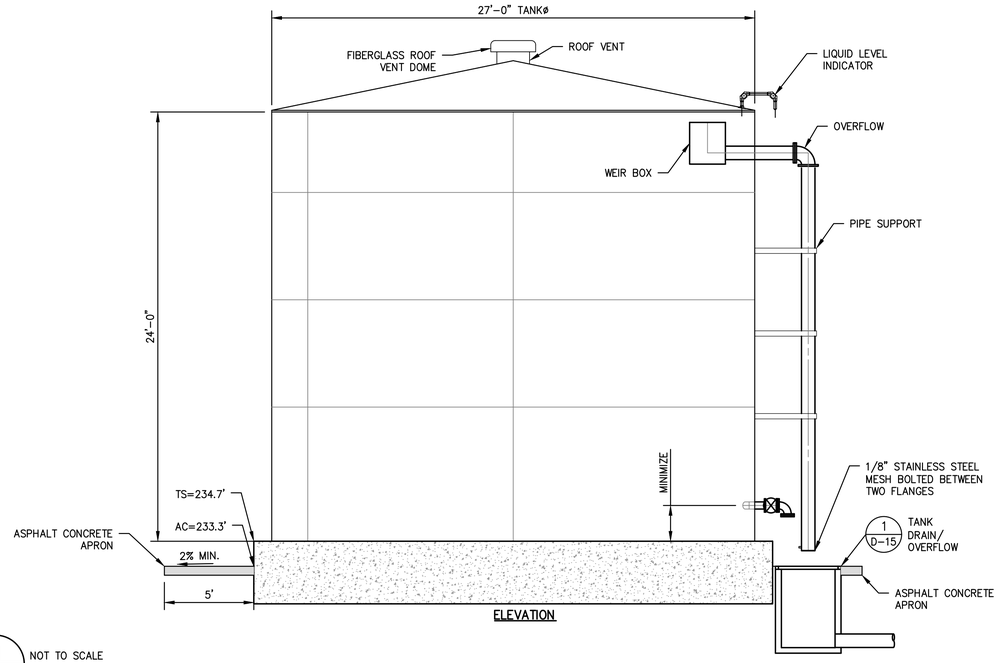


ELEVATION

1 D-13 NOT TO SCALE

TREATED WATER TANK

NOTES

1. TANK MANUFACTURER TO PROVIDE PIPE SUPPORTS SUFFICIENT TO SUPPORT 18-INCH INLET RISER.
2. NO AIR GAP REQUIRED ON TREATED WATER TANK INLET.

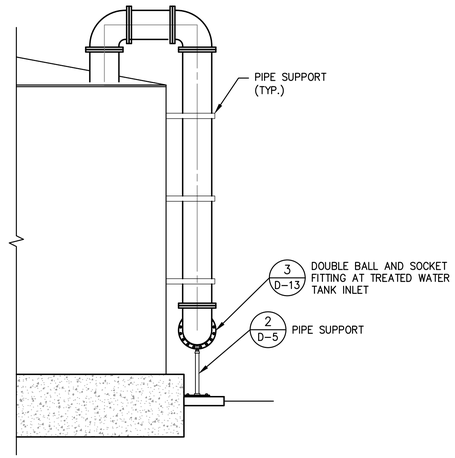


2 D-13 NOT TO SCALE

TREATED WATER TANK INLET

NOTES

1. SEE TANK PLANS FOR PIPE SIZES AND FEATURE ORIENTATION.

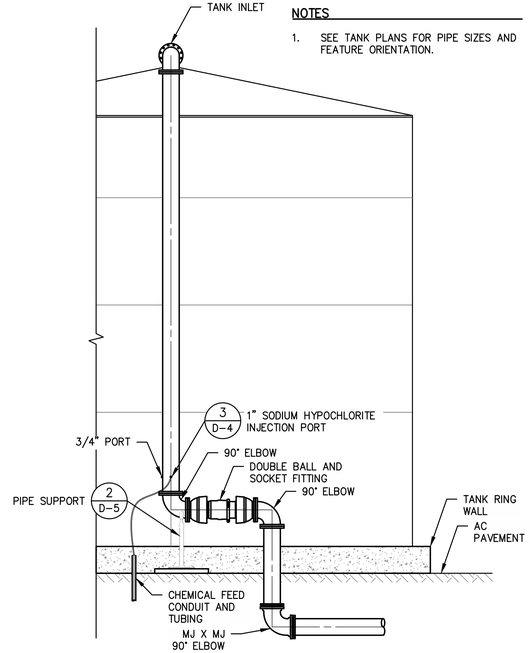


3 D-13 NOT TO SCALE

DOUBLE BALL AND SOCKET FITTING AT TREATED WATER TANK INLET

NOTES

1. SEE TANK PLANS FOR PIPE SIZES.

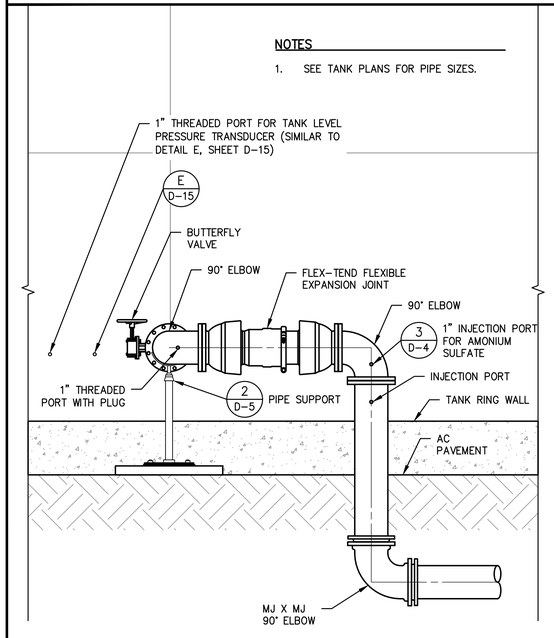


4 D-13 NOT TO SCALE

DOUBLE BALL AND SOCKET FITTING AT TREATED WATER TANK OUTLET

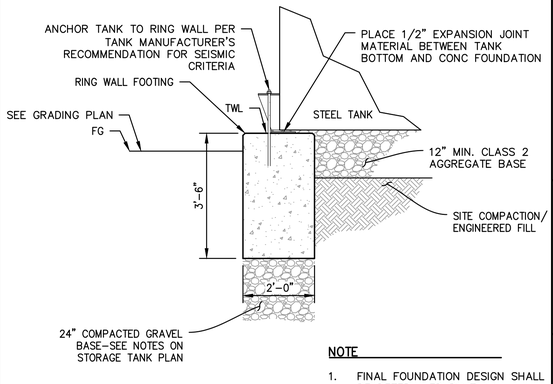


NOTE

1. FINAL FOUNDATION DESIGN SHALL BE DETERMINED BY TANK MANUFACTURER.

5 D-13 NOT TO SCALE

TANK FOOTING

COPYRIGHT 2021 by PROVOST & PRITCHARD ENGINEERING GROUP, INC. ALL RIGHTS RESERVED
The firm of Provost & Pritchard Engineering Group, Inc. expressly reserves its property rights in these plans. These plans are not to be reproduced, changed, or copied in any form or manner whatsoever, nor are they to be assigned to a third party without first obtaining the written permission and consent of Provost & Pritchard Engineering Group, Inc. In the event of unauthorized reuse of these plans by a third party, Provost & Pritchard Engineering Group, Inc. and Provost & Pritchard Engineering Group, Inc. hereby disclaim any responsibility for such reuse. The client shall indemnify and hold Provost & Pritchard Engineering Group, Inc. and its officers and employees harmless from all claims, damages and liabilities associated with any unauthorized reuse of these plans by the client or by any party for whom the client is responsible. In addition, the client shall compensate Provost & Pritchard Engineering Group, Inc. for any time spent or expenses incurred by Provost & Pritchard Engineering Group, Inc. in defending any such unauthorized reuse. The client's indemnity shall include attorney's fees and costs, and if Provost & Pritchard Engineering Group, Inc. is required to institute legal proceedings to enforce these rights.

| No. | REVISION | BY | DATE |
|---|---|---|---|
| | BID ISSUE 10-12-2021 | | |

REGISTERED PROFESSIONAL ENGINEER KEVIN M. BERRYHILL No. 70415 STATE OF CALIFORNIA

DATE SIGNED: 10/12/2021

1,2,3-TCP REMOVAL PROJECT FOR CONEJO WELLS
CAMROSA WATER DISTRICT
CAMARILLO, CA

DETAILS

TREATED WATER TANK DETAILS

PROVOST & PRITCHARD CONSULTING GROUP
EST. 1963
An Employee Owned Company
286 W. CROMWELL AVENUE
FRESNO, CALIFORNIA 93711
559.449.2700 FAX 559.449.2715
https://provostandpritchard.com/

DESIGN ENGINEER: KEVIN BERRYHILL
LICENSE NO: 70415
DRAFTED BY: JB | CHECKED BY: RKB
DATE: 10/11/2021
JOB NO: 295820002
PROJECT NO: 295820002
PHASE:

ORIGINAL SCALE SHOWN IS ONE INCH. ADJUST SCALE FOR REDUCED OR ENLARGED PLANS.

SHEET D-13
29 OF 54

10/12/2021 9:49 AM \\ppeng.com\pzdata\clients\Camrosa Water District-295820002-Camrosa GAC Design Project\300 CAD\340 Sheet Sets\04_Civil_Details\D-11 FINISHED WATER TANK DETAILS.dwg - Michael McConnell

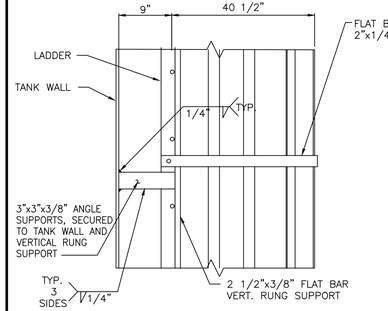


CAGE BRACKET DETAIL (A)
N.T.S.

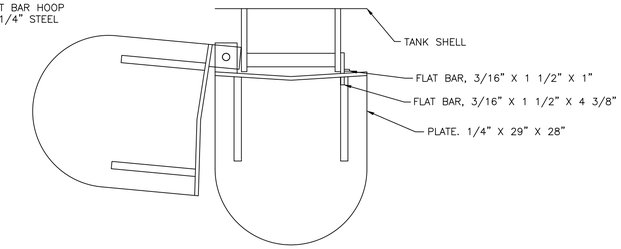


CAGE COVER DETAIL (B)
N.T.S.

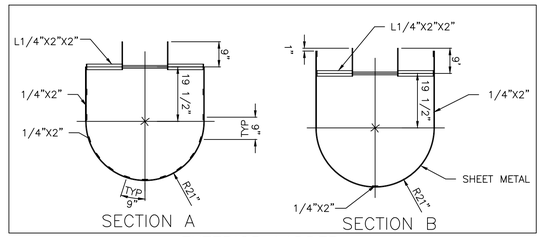


EXTERIOR LADDER
PLAN VIEW

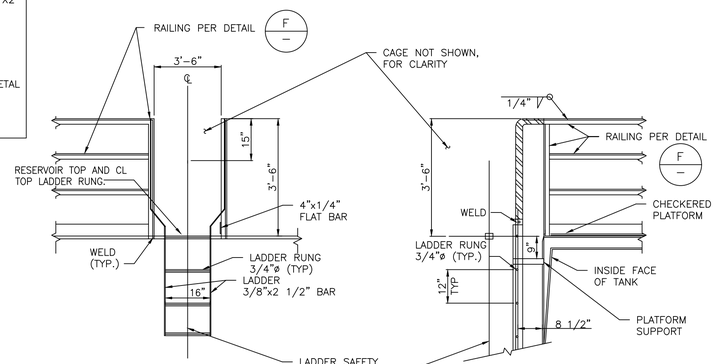


FRONT ELEVATION

SIDE ELEVATION

OUTSIDE LADDER EXTENSION (C)
N.T.S.

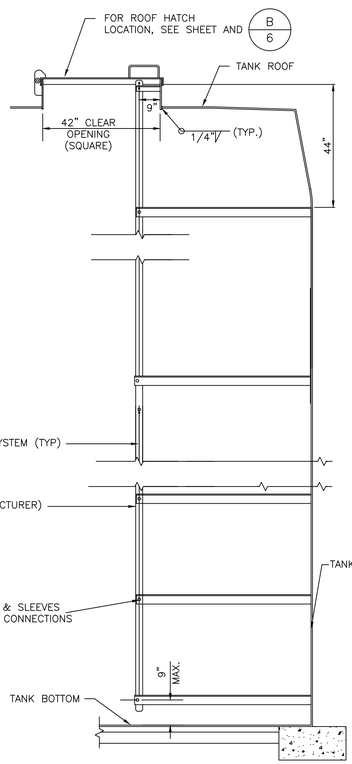


ROOF HATCH AND SIDE
VIEW INTERIOR LADDER (D)
N.T.S.

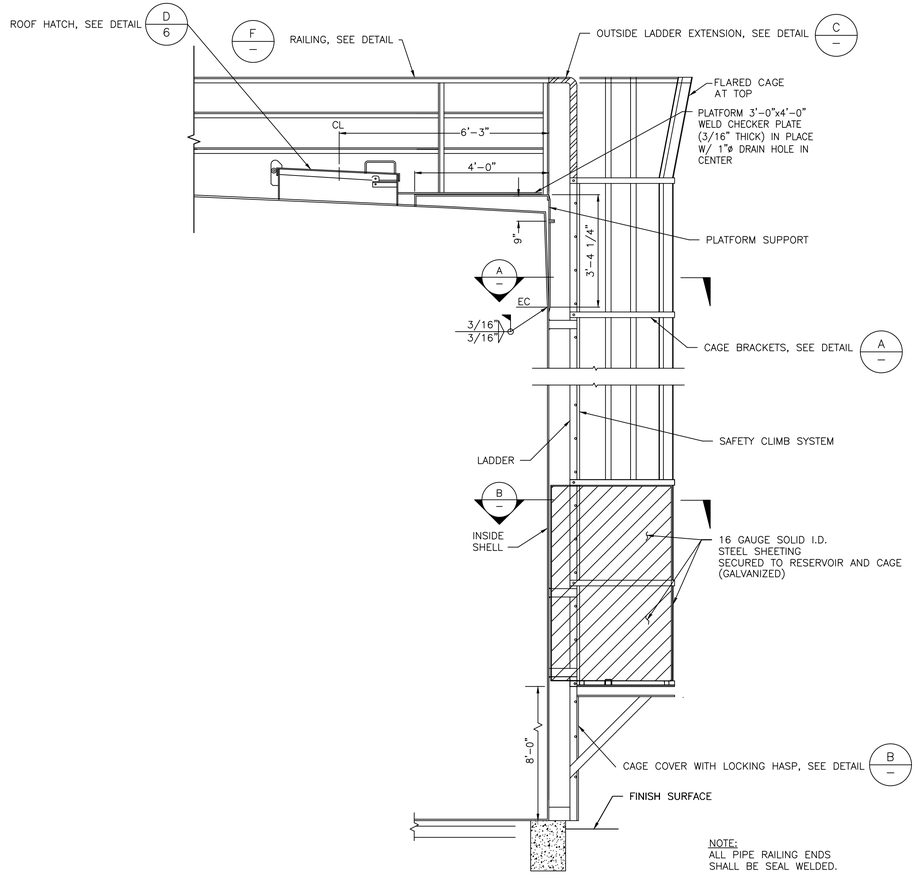


EXTERIOR LADDER DETAIL (E)
N.T.S.

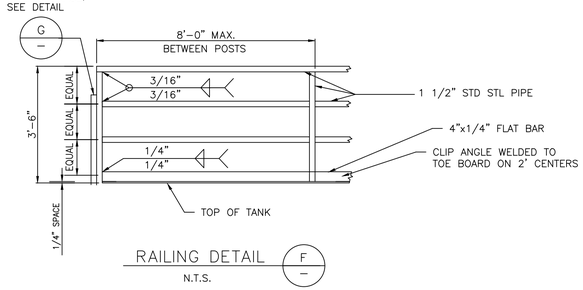


RAILING DETAIL (F)
N.T.S.

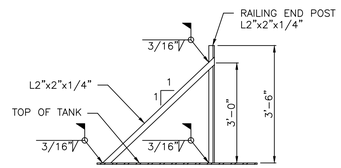


RAILING BRACE DETAIL (G)
N.T.S.

1
D-14

COPYRIGHT 2020 by PROVOST & PRITCHARD
ENGINEERING GROUP, INC. ALL RIGHTS RESERVED
The firm of Provost & Pritchard Engineering Group, Inc. expressly reserves its property rights, including copyright and other applicable property rights in these plans. These plans are not to be reproduced, changed, or copied in any form or manner whatsoever, nor are they to be assigned to a third party without first obtaining the expressed written permission and consent of Provost & Pritchard Engineering Group, Inc. In the event of unauthorized reuse of these plans by a third party, Provost & Pritchard Engineering Group, Inc. hereby requires that the third party defend, indemnify, and hold Provost & Pritchard Engineering Group, Inc. harmless from any claims, losses, or legal fees associated with defending and enforcing these rights.

| No. | REVISION | BY | DATE |
|---|---|---|---|
| | BID ISSUE 10-12-2021 | | |

REGISTERED PROFESSIONAL ENGINEER
KEVIN M. BERRYHILL
No. 70415
STATE OF CALIFORNIA
DATE SIGNED: 10/12/2021

1,2,3-TCP REMOVAL PROJECT FOR
CONEJO WELLS
CAMROSA WATER DISTRICT
CAMARILLO, CA

DETAILS

TANK DETAILS

EST. 1968
PROVOST& PRITCHARD CONSULTING GROUP
An Employee Owned Company
286 E. FIFTH AVENUE
MESA, CALIFORNIA 93611
559.449.2700 FAX 559.449.2715
https://provostandpritchard.com/

DESIGN ENGINEER: KEVIN BERRYHILL
LICENSE NO: 70415
DRAFTED BY: JB | CHECKED BY: RKB
DATE: 10/11/2021
JOB NO: 295820002
PROJECT NO: 295820002
PHASE:
0 1"
ORIGINAL SCALE SHOWN IS ONE INCH. ADJUST SCALE FOR REDUCED OR ENLARGED PLANS.
SHEET D-14
30 OF 54

10/12/2021 9:50 AM \\ppeng.com\gzdata\clients\Camrosa Water District-29582\295820002-Camrosa GAC Design Project\300 CAD\340 Sheet Sets\04_Civil_Details\D-13 TANK DETAILS.dwg -Michael McConnell

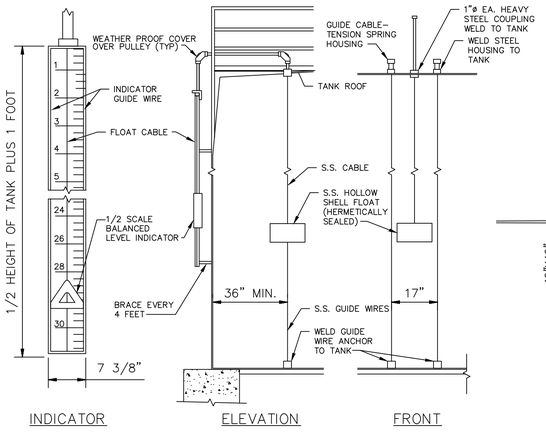


HALF SCALE LIQUID LEVEL INDICATOR (A)
N. T. S.

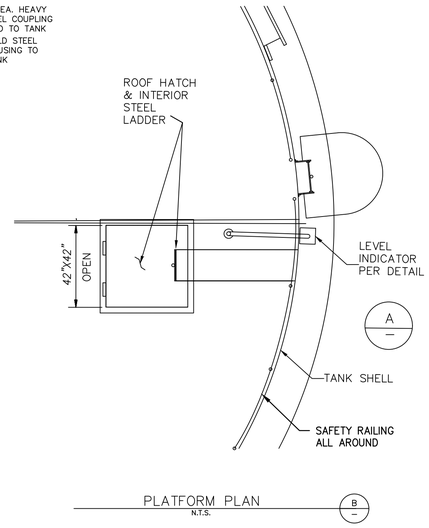


PLATFORM PLAN (B)
N.T.S.

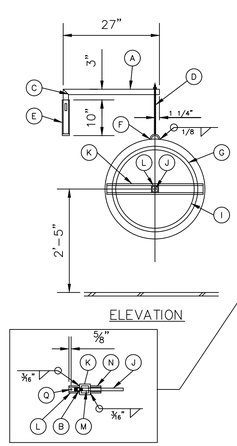


ELEVATION

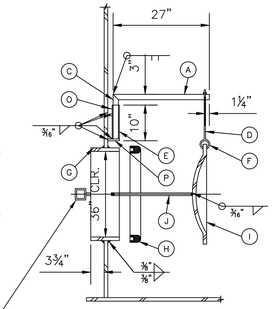


SECTION

NOTE:

1. ALL ACCESS MANWAY INTERIOR COMPONENTS SHALL BE STAINLESS STEEL No. (316)

| MATERIAL LIST – ACCESS MANWAY | |
|---|---|
| ITEM | DESCRIPTION |
| A. | 1½" STD. WT. PIPE x 2'–3" LG. MITER & WELD AS SHOWN |
| B. | ¾" HEAVY HEX NUT & WASHER |
| C. | 1½" STD. WT. PIPE x 13" LG. MITER & WELD AS SHOWN |
| D. | ⅜" x 8" EYE BOLT & 2 NUTS |
| E. | 2" SCH. 80 STEEL PIPE x 10" LG. |
| F. | ⅜" HALF LINK |
| G. | 1" THICK x 8" WIDE x 9'–11⅜" LG. PL. ROLLED TO 36" I.D. |
| H. | ¼" C RING GASKET x 35⅗" I.D. 50 DURO–HARD (PROVIDE SPARE) |
| I. | ⅜" x 34" I.D. x 40" O.D. x 40" RAD HAT HEAD |
| J. | ¾" DIA. ROUND BAR x 10½" LG. W/2" NC T.O.E. |
| K. | TS 3" x 3"x ¼" x 42" LG. |
| L. | TS 2½" x 2½" x 3/16" x 2 ½", LG. W/7/16" DIA. HOLES |
| M. | 3/4" STD. WT. PIPE x 3" LG. |
| N. | TS 2½" x 2½" x 3/16" x 3" LG. W/7/16" DIA. HOLES |
| O. | 1¼" x 1½" x ⅜" FB |
| P. | 3½"x 1½"x ⅜" FB |
| Q. | 7/16" DIA. HOLES FOR PADLOCK |

ACCESS MANWAY DETAIL (C)
N. T. S.

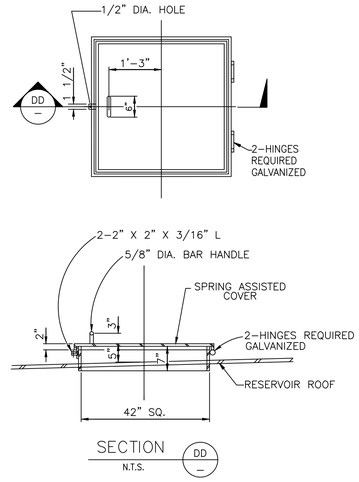


SECTION (DD)
N.T.S.

42" HINGED ROOF MANHOLE (D)
N.T.S.

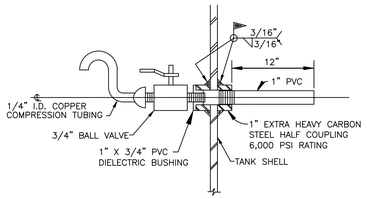


WATER SAMPLING STATION (E)
N. T. S.

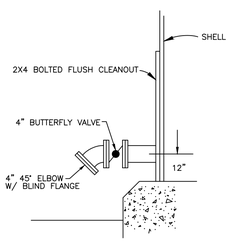


SECTION (G)
N. T. S.

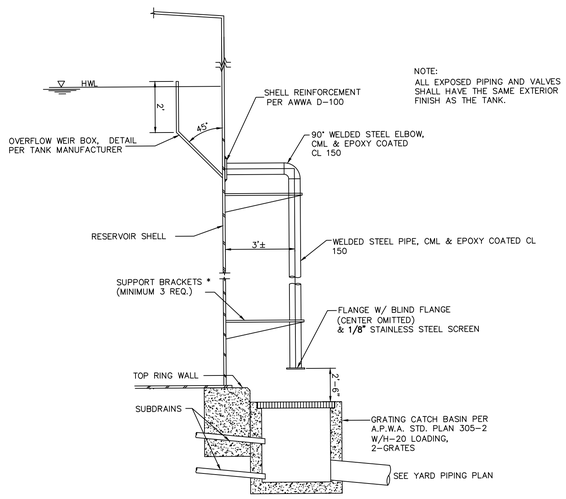


NOTE:
ALL EXPOSED PIPING AND VALVES SHALL HAVE THE SAME EXTERIOR FINISH AS THE TANK.

OVER FLOW & DRAIN DETAIL
PIPING & CATCH BASIN (H)
N. T. S.

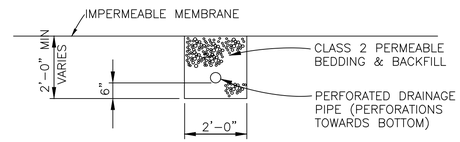


PIPE TO MEET REQUIREMENTS:
ABS PIPE: ASTM D2751, SDR 35 OR ASTM D1527 SCHED. 40
PVC PIPE: ASTM D3024, SDR 35 OR ASTM D1785 SCHED. 40
CLASS 2 FILTER MATERIAL SHOULD CONFORM TO GRADATION SPECIFICATIONS LISTED IN OCEMA STD PLAN NO. 1323 OR AN APPROVED EQUAL CONSISTING OF FILTER FABRIC AND CRUSHED ROCK.

LOWER SUBDRAIN DETAIL

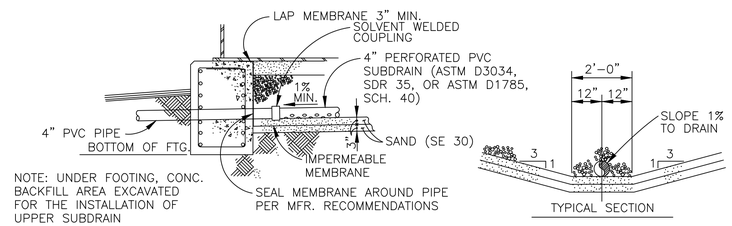


UPPER SUBDRAIN DETAIL

RESERVOIR SUBDRAIN DETAILS (I)
NTS

1
D–15

COPYRIGHT 2021 by PROVOST & PRITCHARD ENGINEERING GROUP, INC. ALL RIGHTS RESERVED
The firm of Provost & Pritchard Engineering Group, Inc. expressly reserves its property rights, including copyright and other applicable property rights in these plans. These plans are not to be reproduced, changed, or copied in any form or manner whatsoever, nor are they to be assigned to a third party without first obtaining the expressed written permission and consent of Provost & Pritchard Engineering Group, Inc. In the event of unauthorized reuse of these plans by a third party, Provost & Pritchard Engineering Group, Inc. shall be indemnified, held harmless, and shall be compensated by the third party for any claims, injuries, damages, losses, or liabilities arising out of or resulting from the unauthorized reuse. Provost & Pritchard Engineering Group, Inc. shall have the right to pursue all legal means deemed necessary to protect its ownership rights and to recover damages, including attorney's fees associated with defending and enforcing these rights.

| No. | REVISION | BY | DATE |
|---|---|---|---|
| | BID ISSUE 10-12-2021 | | |

REGISTERED PROFESSIONAL ENGINEER KEVIN M. BERRYHILL No. 70415 STATE OF CALIFORNIA

DATE SIGNED: 10/12/2021

1,2,3–TCP REMOVAL PROJECT FOR CONEJO WELLS
CAMROSA WATER DISTRICT
CAMARILLO, CA

DETAILS

TANK DETAILS

EST. 1962 PROVOST& PRITCHARD CONSULTING GROUP
An Employee Owned Company
CLOVIS OFFICE
1401 SHAW AVENUE, SUITE 201
CLOVIS, CA 93611
559 449-2700 FAX 559 449-2715
https://provostandpritchard.com/

DESIGN ENGINEER: KEVIN BERRYHILL
LICENSE NO: 70415
DRAFTED BY: JB | CHECKED BY: RKB
DATE: 10/11/2021
JOB NO: 295820002
PROJECT NO: 295820002
PHASE:

0 1"
ORIGINAL SCALE SHOWN IS ONE INCH. ADJUST SCALE FOR REDUCED OR ENLARGED PLANS.

SHEET D-15
31 OF 54

10/12/2021 9:50 AM \\ppeng.com\prjdata\clients\Camrosa Water District–295820002–Camrosa GAC Design Project\300 CAD\340 Sheet Sets\04_Civil_Details\D–14 TANK DETAILS.dwg –Michael McConnell

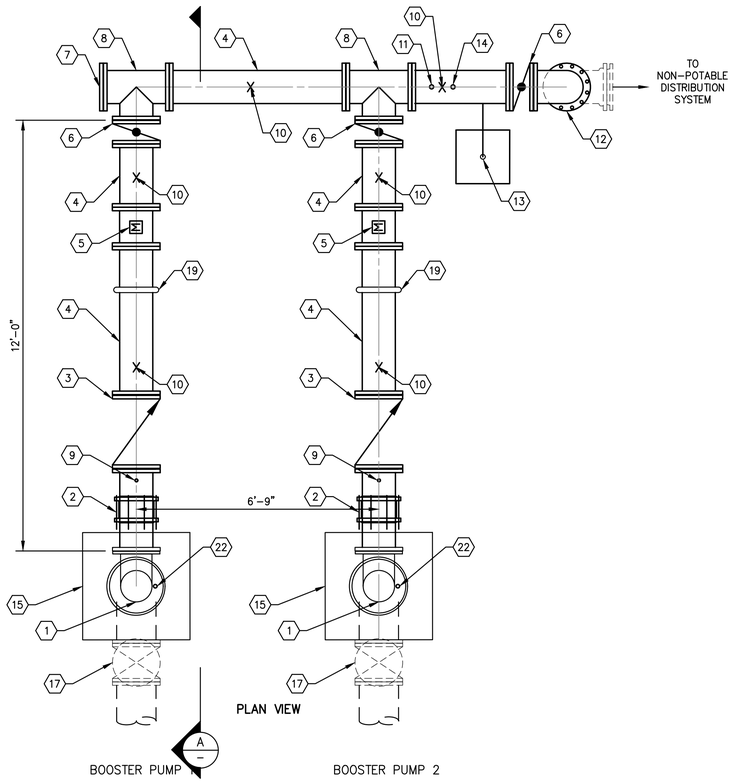


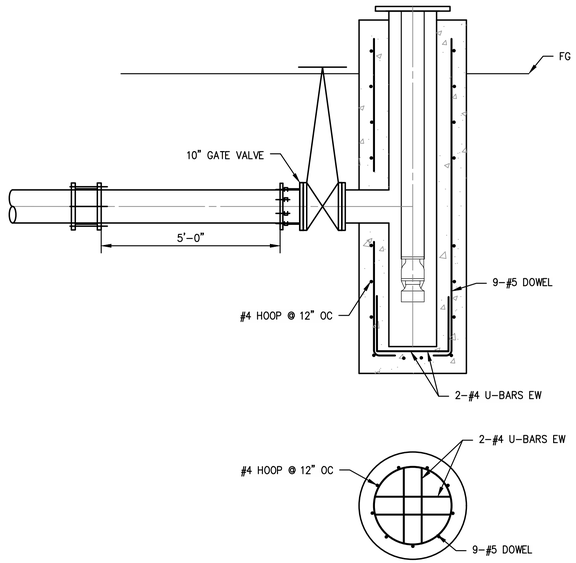


REBAR DETAIL

| MATERIAL LIST | |
|---|---|
| NO. | DESCRIPTION |
| 1 | VERTICAL TURBINE PUMP (REFER TO 43 21 52) |
| 2 | 10"ø "SLEEVE" COUPLING W/ THRUST RESTRAINT |
| 3 | 10"ø VALMATIC SURGE BUSTER CHECK VALVE |
| 4 | 10"ø SPOOL |
| 5 | 10"ø ELECTROMAGNETIC FLOW METER |
| 6 | 10"ø TYPE 1 BUTTERFLY VALVE |
| 7 | 10"ø BLIND FLANGE |
| 8 | 10"ø TEE |
| 9 | TYPE 5 PRESSURE GAGE (3/D-6) |
| 10 | ADJUSTABLE PIPE SUPPORT (2/D-5) |
| 11 | 1" TYPE 1 COMBINATION AIR VALVE (1/D-5) |
| 12 | 10" ø 90° ELBOW |
| 13 | PRESSURE TRANSDUCER MOUNTED TO STAND (1/D-6) |
| 14 | SAMPLE TAP (3/D-5) |
| 15 | CONCRETE PUMP PEDESTAL |
| 16 | 10" SPOOL |
| 17 | 10" GATE VALVE |
| 18 | 10"ø SLEEVE COUPLING (LONG BODIED) |
| 19 | GROOVED COUPLING, RIGID |
| 20 | NOT USED |
| 21 | FLANGE COUPLING ADAPTER |
| 22 | 3/4" TYPE 1 COMBINATION AIR RELEASE VALVE |

NOTES

1. ALL HOLES WITHIN THE PUMP HEAD MUST BE SEALED.
2. ALL TUBING SHALL BE INSULATED TO PROTECT FROM FREEZING.
3. ALL PIPE SUPPORTS ADJUSTABLE AND CONCRETE, SHALL INCLUDE U-BOLT FOR THRUST RESTRAINT.
4. PUMP MANIFOLD DIMENSIONS ARE DEPENDANT UPON ACTUAL EQUIPMENT PROVIDED BY THE CONTRACTOR.

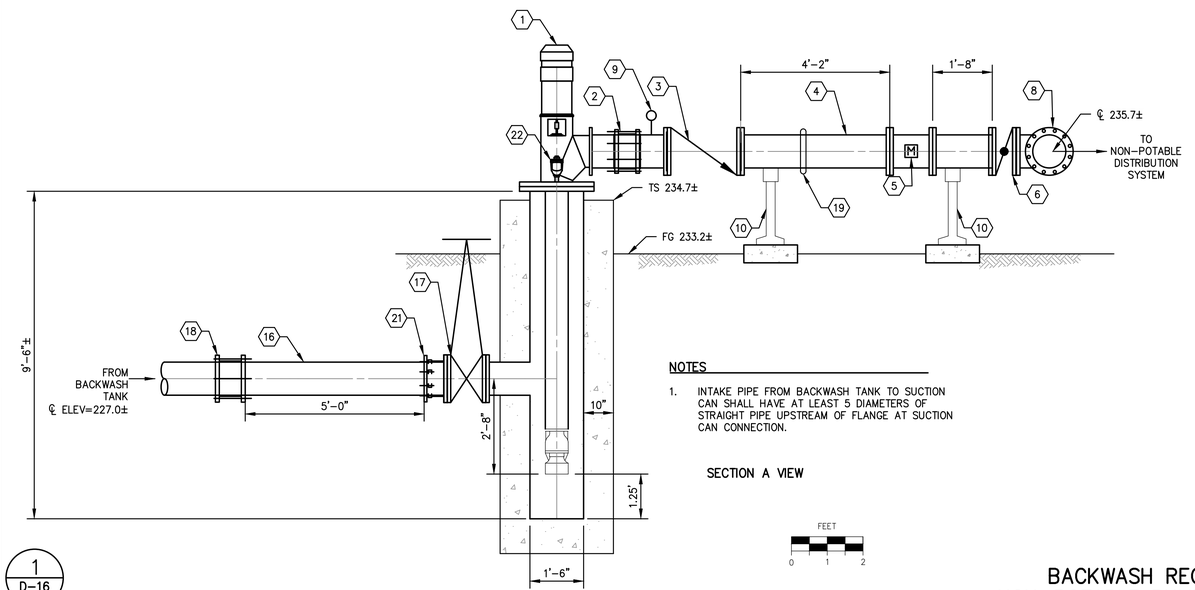


NOTES

1. INTAKE PIPE FROM BACKWASH TANK TO SUCTION CAN SHALL HAVE AT LEAST 5 DIAMETERS OF STRAIGHT PIPE UPSTREAM OF FLANGE AT SUCTION CAN CONNECTION.

SECTION A VIEW

PUMP NOTES

1. CONSTRUCT PUMP CAN TOP LEVEL. SUPPORT PUMP CAN TO PREVENT SHIFTING DURING PLACEMENT OF CONCRETE.
2. PUMP SUCTION CAN DIMENSIONS ARE APPROXIMATE. CONTRACTOR SHALL FURNISH PUMP CAN MEETING HYDRAULIC INSTITUTE STANDARDS FOR THE ACTUAL PUMP MODEL FURNISHED AT NO ADDITIONAL COST TO THE OWNER.

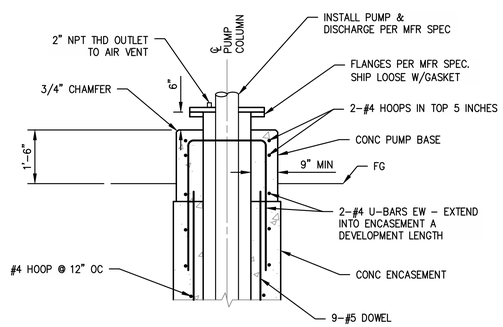


PUMP BASE DETAIL

FEET
0 1 2

1
D-16

# BACKWASH RECLAIM NON-POTABLE PUMP STATION

COPYRIGHT 2021 by PROVOST & PRITCHARD ENGINEERING GROUP, INC. ALL RIGHTS RESERVED
The firm of Provost & Pritchard Engineering Group, Inc. expressly reserves its property rights and any other applicable property rights in these plans. These plans are not to be reproduced, changed, or copied in any form or manner whatsoever, nor are they to be assigned to a third party without first obtaining the written permission and consent of Provost & Pritchard Engineering Group, Inc. In the event of unauthorized reuse of these plans by a third party, Provost & Pritchard Engineering Group, Inc. shall be indemnified, defended, and held harmless by the third party from any claim or liability arising out of such reuse. Third party agrees to pay all attorney's fees, costs, and expenses incurred by Provost & Pritchard Engineering Group, Inc. in pursuing any action for enforcement of its rights hereunder or in defending and enforcing these rights.

BID ISSUE
10-12-2021

| No. | REVISION | BY | DATE |
|---|---|---|---|

REGISTERED PROFESSIONAL ENGINEER KEVIN R. BERRYHILL No. 70415 STATE OF CALIFORNIA
DATE SIGNED: 10/12/2021

1,2,3-TCP REMOVAL PROJECT FOR
CONEJO WELLS
CAMROSA WATER DISTRICT
CAMARILLO, CA

DETAILS
BACKWASH REINTEGRATION PUMP DETAILS

EST 1968 PROVOST& PRITCHARD CONSULTING GROUP
An Employee Owned Company
286 W. CYPRESS AVENUE
VISALIA, CALIFORNIA 93277-3811
559/449-2700 FAX 559/449-2715
https://provostandpritchard.com/

DESIGN ENGINEER: KEVIN BERRYHILL
LICENSE NO: 70415
DRAFTED BY: JB | CHECKED BY: RKB
DATE: 10/11/2021
JOB NO: 295820002
PROJECT NO: 295820002
PHASE:
0 1"
ORIGINAL SCALE SHOWN IS ONE INCH. ADJUST SCALE FOR REDUCED OR ENLARGED PLANS.
SHEET D-16
32 OF 54

10/12/2021 9:50 AM \\ppeng.com\przdata\clients\Camrosa Water District-295#\295820002-Camrosa GAC Design Project\300 CAD\340 Sheet Sets\04_Civil_Details\D-12 BOOSTER PUMP DETAILS.dwg - Michael McConnell

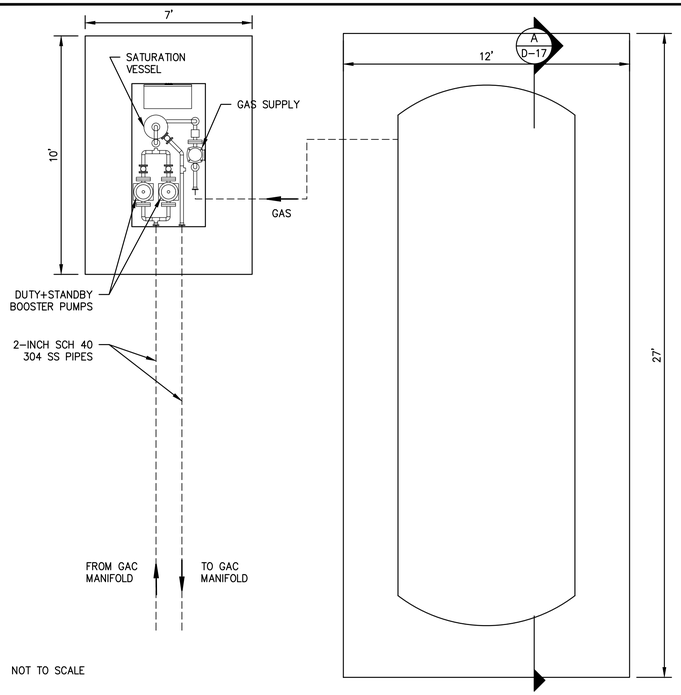


1
D-17

CARBON DIOXIDE SYSTEM PLAN VIEW

NOTES

1. CONTRACTOR TO FURNISH INTERCONNECTING STAINLESS STEEL PIPING, CONDUIT, AND WIRING BETWEEN SOLUTION FEED SKID AND CARBON DIOXIDE STORAGE TANK. CONNECTIONS INCLUDING BUT ARE NOT LIMITED TO GAS DELIVERY, AUX VAPOR, AND AUX LIQUID. REFER TO PRELIMINARY CARBON DIOXIDE SYSTEM SUBMITTAL PACKAGE.

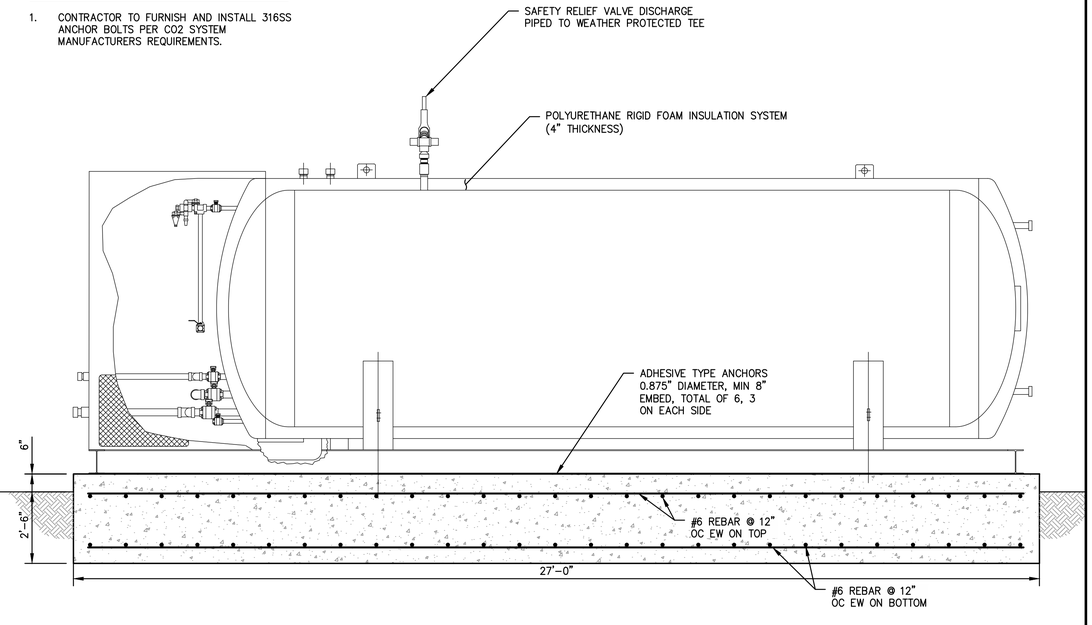


A
D-17

CARBON DIOXIDE STORAGE TANK SECTION

WARNING
POWER LINES OVERHEAD

811
Know what's below.
Call before you dig.

COPYRIGHT NOTICE & PROPRIETARY INFORMATION
PROVOST & PRITCHARD ENGINEERING GROUP, INC. ALL RIGHTS RESERVED
The firm of Provost & Pritchard Engineering Group, Inc. expressly reserves its common law copyright and other applicable property rights in these plans. These plans are not to be reproduced, changed, or copied in any form or manner whatsoever, nor are they to be assigned to a third party without first obtaining the expressed written permission and consent of Provost & Pritchard Engineering Group, Inc. In the event of unauthorized reuse of these plans by a third party, the third party agrees to hold Provost & Pritchard Engineering Group, Inc. harmless, and shall assume all responsibility for such reuse. The third party shall also indemnify Provost & Pritchard Engineering Group, Inc. for all loss, damages, and liability resulting from such unauthorized reuse, including all costs and attorney's fees associated with defending and enforcing these rights.

| No. | REVISION | BY | DATE |
|---|---|---|---|
| | BID ISSUE 10-12-2021 | | |

REGISTERED PROFESSIONAL ENGINEER
KEVIN M. BERRYHILL
No. 70415
STATE OF CALIFORNIA

DATE SIGNED: 10/12/2021

1,2,3-TCP REMOVAL PROJECT FOR
CONEJO WELLS
CAMROSA WATER DISTRICT
CAMARILLO, CA

DETAILS

CARBON DIOXIDE SYSTEM DETAILS

EST 1968
PROVOST& PRITCHARD CONSULTING GROUP
An Employee Owned Company
286 W. CROMWELL AVE.
FRESNO, CA 93711
559.449.2700 FAX 559.449.2715
https://provostandpritchard.com/

DESIGN ENGINEER: KEVIN BERRYHILL
LICENSE NO: 70415
DRAFTED BY: JB
CHECKED BY: RKB
DATE: 10/11/2021
JOB NO: 295820002
PROJECT NO: 295820002
PHASE:

0 1"
ORIGINAL SCALE SHOWN IS ONE INCH. ADJUST SCALE FOR REDUCED OR ENLARGED PLANS.

SHEET D-17

33 OF 54

10/12/2021 9:51 AM \\ppeng.com\pzdata\clients\Camrosa Water District-295820002-Camrosa GAC Design Project\300 CAD\340 Sheet Sets\04_Civil_Details\D-13 CARBON DIOXIDE SYSTEM DETAILS.dwg -Michael McConnell

## VALVE BOX DETAILS

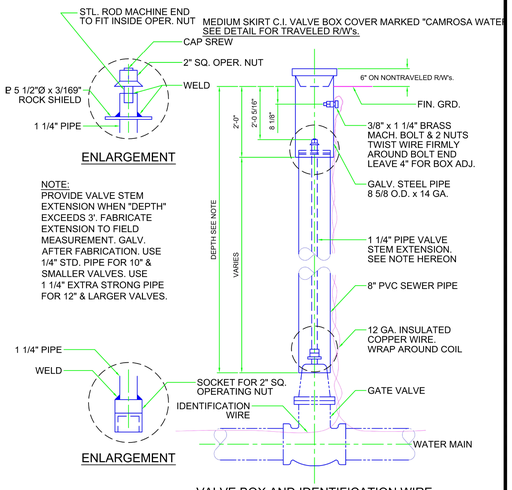


NOTE:
PROVIDE VALVE STEM EXTENSION WHEN "DEPTH" EXCEEDS 3'. FABRICATE EXTENSION TO FIELD MEASUREMENT. GALV. AFTER FABRICATION. USE 1/4" STD. PIPE FOR 10" & SMALLER VALVES. USE 1 1/4" EXTRA STRONG PIPE FOR 12" & LARGER VALVES.

VALVE BOX AND IDENTIFICATION WIRE

NOTE: WIRE MUST BE DUCT TAPED @ 10" O.C. TO THE PIPE.

| TS MANAGER | CAMROSA WATER DISTRICT | DISTRICT STANDARD **W-27** |
|---|---|---|
| TJC ENGINEER | BUILDING WATER SELF-RELIANCE | REVISED: November 1, 2011 |

## TYPICAL VALVE BOX INSTALLATION

TYPICAL VALVE BOX INSTALLATION IN (PAVED) TRAVEL WAY

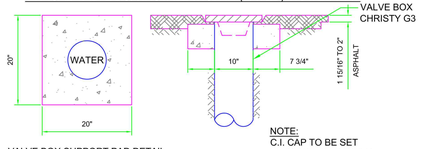


VALVE BOX SUPPORT PAD DETAIL

NOTE:
C.I. CAP TO BE SET FLUSH WITH FINISHED SURFACE.

TYPICAL VALVE BOX INSTALLATION IN (non-PAVED) TRAVEL WAY

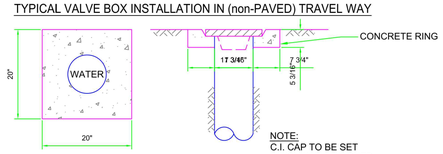


VALVE BOX SUPPORT PAD DETAIL

NOTE:
C.I. CAP TO BE SET FLUSH WITH FINISHED SURFACE.

TYPICAL VALVE BOX INSTALLATION IN (NON) -TRAVEL WAY

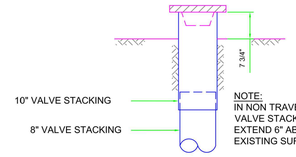


NOTE:
IN NON TRAVEL AREAS, VALVE STACKING SHALL EXTEND 6" ABOVE EXISTING SURFACE.

| TS MANAGER | CAMROSA WATER DISTRICT | DISTRICT STANDARD **W-28** |
|---|---|---|
| TJC ENGINEER | BUILDING WATER SELF-RELIANCE | REVISED: November 1, 2011 |

## 2" AND SMALLER CONNECTION DETAILS WELDED STEEL & STEEL CYLINDER CONC. PIPE

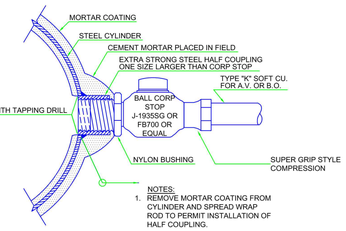


NOTES:
1. REMOVE MORTAR COATING FROM CYLINDER AND SPREAD WRAP ROD TO PERMIT INSTALLATION OF HALF COUPLING.
2. BALL VALVE SHALL HAVE MIP THREAD

TYPICAL DETAIL FOR 3/4"-2" SERVICE CONNECTION
FOR AIR-VACS. AND BLOW-OFFS THROUGH 2"

| FR MANAGER | CAMROSA WATER DISTRICT | DISTRICT STANDARD **W-38** |
|---|---|---|
| TJC ENGINEER | BUILDING WATER SELF-RELIANCE | REVISED: November 1, 2011 |

COPYRIGHT 2021 by PROVOST & PRITCHARD ENGINEERING GROUP, INC. ALL RIGHTS RESERVED
The firm of Provost & Pritchard Engineering Group, Inc. expressly reserves its property rights, including copyright and other applicable property rights in these plans. These plans are not to be reproduced, changed, or copied in any form or manner whatsoever, nor are they to be assigned to a third party without first obtaining the expressed written permission and consent of Provost & Pritchard Engineering Group, Inc. In the event of unauthorized reuse of these plans by a third party, the third party agrees to hold Provost & Pritchard Engineering Group, Inc. harmless, and shall indemnify Provost & Pritchard Engineering Group, Inc. for all loss, damage, and liability expenses associated with defending and enforcing these rights.

BID ISSUE
10-12-2021

| No. | REVISION | BY | DATE |
|---|---|---|---|




DATE SIGNED: 10/12/2021

## 2 INCH & SMALLER CONNECTION FOR A.C. DUCTILE IRON AND PVC PIPE

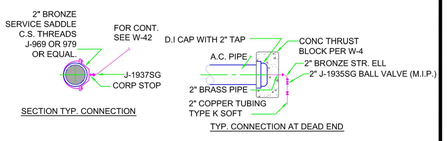


2" BLOW-OFF CONNECTIONS

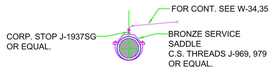


1"-2" INCL. AUTO AIR & VACUUM-AIR RELEASE CONNECTIONS




1" THROUGH 2" SERVICE CONNECTIONS

NOTE:
1. SEE SECTION III-II FOR DETERMINATION OF SERVICE SIZE.

| TS MANAGER | CAMROSA WATER DISTRICT | DISTRICT STANDARD **W-39** |
|---|---|---|
| TJC ENGINEER | BUILDING WATER SELF-RELIANCE | REVISED: November 1, 2011 |

## WATER AND SEWER SEPARATION REQUIREMENTS

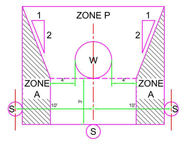


PARALLEL CONSTRUCTION

IF A SANITARY SEWER IS TO BE LOCATED WITHIN 10 FEET OF A WATER MAIN OR SERVICE LATERAL WITHIN ANY OF THE ABOVE INDICATED ZONES, SPECIAL SEWER CONSTRUCTION WILL BE REQUIRED AS SHOWN BELOW.

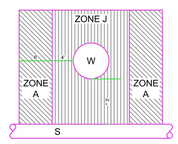


PERPENDICULAR CONSTRUCTION

IF A SANITARY SEWER OR HOUSE SEWER LATERAL CROSSES A WATER MAIN OR SERVICE LATERAL WITHIN ANY OF THE INDICATED ZONES, SPECIAL CONSTRUCTION WILL BE REQUIRED AS SHOWN BELOW. * 2' CLEAR FOR LATERALS.

| ZONE | SEWER CONSTRUCTION REQUIREMENTS |
|---|---|
| A | VITRIFIED CLAY PIPE WITH MECH. COMP. JOINTS OR PVC PIPE WITH RUBBER RING JOINTS OR CAST IRON PIPE WITH MECHANICAL COMPRESSION JOINTS. (V.C.P. OR P.V.C. OR C.I.P.) |
| J | SAME MATERIAL AS ALLOWED IN ZONE "A" EXCEPT THAT NO JOINTS MAY FALL IN ZONE J. MINIMUM CLEARANCE BETWEEN OUTSIDES OF PIPE SHALL BE NOT LESS THAN 6". |
| P | DO NOT LOCATE ANY PARALLEL SEWER IN THIS AREA WITHOUT SPECIAL APPROVAL OF THE DISTRICT ENGINEER. |
| W | INDICATES WATER MAIN AND SERVICE LATERALS. WHERE SERVICE LATERAL IS GALVANIZED IRON OR COPPER, WITHOUT JOINTS IN THE PROHIBITED AREA, NO SPECIAL CONSTRUCTION IS REQUIRED FOR CROSSING SEWER IN ANY ZONE. |
| S | INDICATES SEWER OR HOUSE LATERAL. |

WATER AND SEWER LINES MAY BE CONSTRUCTED IN AREAS PROHIBITED BY SECTION 8602 OF THE VENTURA COUNTY CODE IF WATER LINES ARE INSTALLED IN WATER TIGHT STEEL CASINGS AND SEWER LINES ARE CONSTRUCTED OF ZONE "A" MATERIALS.

WATER LINES AND SERVICE LATERALS INSTALLED SO-AS TO PLACE A SEWER OR HOUSE LATERAL IN ANY OF THE RESTRICTED ZONES MUST BE PROTECTED IN A MANNER APPROVED BY THE DISTRICT ENGINEER OR BY RECONSTRUCTION OF SEWER LINES IN THE RESTRICTED ZONES TO MEET REQUIREMENTS.

THIS STANDARD IS ISSUED IN COMPLIANCE WITH VENTURA COUNTY ORDINANCE NUMBER 1457, DIV. 8, CHAP. 6, SEC. 8603(b) OF ORDINANCE CODE.

| TS MANAGER | CAMROSA WATER DISTRICT | DISTRICT STANDARD **W-55** |
|---|---|---|
| TJC ENGINEER | BUILDING WATER SELF-RELIANCE | REVISED: November 1, 2011 |

## TYPICAL METER & REDUCED PRESSURE BACKFLOW PREVENTER INSTALLATION FOR 3" AND LARGER SERVICE

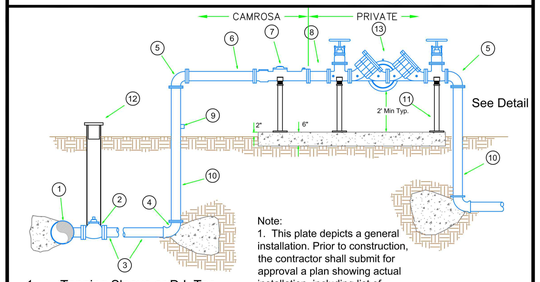


1 Tapping Sleeve or D.I. Tee
2 Gate Valve
3 PVC Pipe (Min. Class 200)
4 90° Ductile Iron C110 Elbow
5 90 Elbow - Flg x Flg
6 Flg x Flg D.I. Spool - Min 5x Pipe Diameter
7 Meter w/Strainer (By District)
8 Flg x Flg D.I. Spool - Min 3x Pipe Diameter w/2" Threaded Test Port & Plug
9 2" Port w/2" Ball Valve (No Lever) and Plug
10 Flg x Flg D.I. Spool - Length Varies
11 Pipe Supports - Galvanized
12 See Standard W-27 for Valve Box Details
13 Approved R.P. Backflow Preventer (Febco #825 or Equal)

Note:
1. This plate depicts a general installation. Prior to construction, the contractor shall submit for approval a plan showing actual installation, including list of materials.

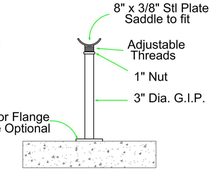


Valve Support Detail

| TS MANAGER | CAMROSA WATER DISTRICT | DISTRICT STANDARD **W-48** |
|---|---|---|
| TJC ENGINEER | BUILDING WATER SELF-RELIANCE | REVISED: November 1, 2011 |

1,2,3 – TCP REMOVAL PROJECT FOR
CONEJO WELLS
CAMROSA WATER DISTRICT
CAMARILLO, CA
DETAILS

DISTRICT STANDARD DETAILS

PROVOST & PRITCHARD CONSULTING GROUP
EST 1963
An Employee Owned Company
286 1ST AVENUE
CLOVIS, CA 93611
559/449-2700 FAX 559/449-2715
https://provostandpritchard.com/

DESIGN ENGINEER: KEVIN BERRYHILL
LICENSE NO: 70415

| DRAFTED BY: JB | CHECKED BY: RKB |
|---|---|

DATE: 10/11/2021
JOB NO: 295820002
PROJECT NO: 295820002
PHASE:

0 1"
ORIGINAL SCALE SHOWN IS ONE INCH. ADJUST SCALE FOR REDUCED OR ENLARGED PLANS.

SHEET D-18

34 OF 54

10/12/2021 9:51 AM \\ppeng.com\prodata\Clients\Camrosa Water District-2958\295820002--Camrosa GAC Design Project\300 CAD\340 Sheet Sets\04_Civil_Details\D-15 DISTRICT STANDARD DETAILS.dwg —Michael McConnell

## 1 INCH VACUUM AND AIR RELEASE

NOTE: USE ALL BRONZE FITTINGS

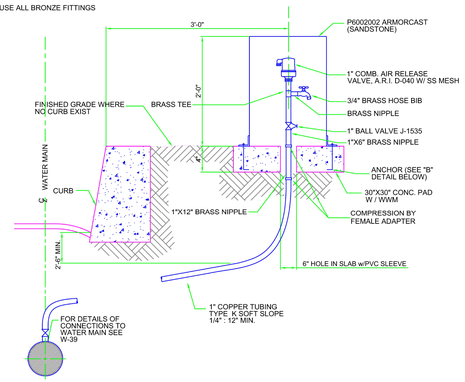


ELEVATION

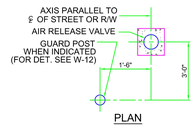


PLAN

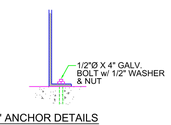


"B" ANCHOR DETAILS

| | | |
|---|---|---|
| TS<br>MANAGER<br>TJC<br>ENGINEER | CAMROSA WATER DISTRICT<br>BUILDING WATER SELF-RELIANCE | DISTRICT STANDARD **W-34**<br>REVISED: November 1, 2011 |

COPYRIGHT 2021 by PROVOST & PRITCHARD ENGINEERING GROUP, INC. ALL RIGHTS RESERVED
The firm of Provost & Pritchard Engineering Group, Inc. expressly reserves its common law copyright and other applicable property rights in these plans. These plans are not to be reproduced, changed, or copied in any form or manner whatsoever, nor are they to be assigned to a third party without first obtaining the written permission and consent of Provost & Pritchard Engineering Group, Inc. In the event of unauthorized reuse of these plans by a third party, the third party shall hold the firm of Provost & Pritchard Engineering Group, Inc. harmless, and shall bear the cost of Provost & Pritchard Engineering Group, Inc.'s legal fees associated with defending and enforcing these rights.

BID ISSUE
10-12-2021

| No. | REVISION | BY | DATE |
|---|---|---|---|

REGISTERED PROFESSIONAL ENGINEER
R. KEVIN BERRYHILL
No. 70415
STATE OF CALIFORNIA

DATE SIGNED: 10/12/2021

1,2,3-TCP REMOVAL PROJECT FOR
CONEJO WELLS
CAMROSA WATER DISTRICT
CAMARILLO, CA

DETAILS

DISTRICT STANDARD DETAILS

EST. 1968
PROVOST & PRITCHARD
CONSULTING GROUP
An Employee Owned Company
455 W FIR AVENUE
CLOVIS, CALIFORNIA 93611
559/449-2700 FAX 559/449-2715
https://provostandpritchard.com/

DESIGN ENGINEER: KEVIN BERRYHILL
LICENSE NO: 70415

| DRAFTED BY: | CHECKED BY: |
|---|---|
| JB | RKB |

DATE: 10/11/2021
JOB NO: 295820002
PROJECT NO: 295820002
PHASE:
0 1"
ORIGINAL SCALE SHOWN IS ONE INCH. ADJUST SCALE FOR REDUCED OR ENLARGED PLANS.

SHEET D-19



10/12/2021 9:52 AM \\ppeng.com\pzdata\clients\Camrosa Water District-2958\295820002-Camrosa GAC Design Project\300 CAD\340 Sheet Sets\04_Civil_Details\D-18 DISTRICT STANDARD DETAILS.dwg -Michael McConnell

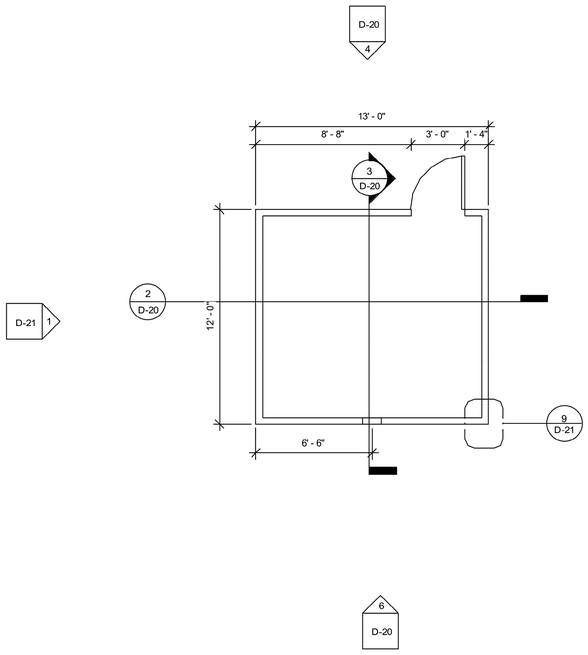


1 Level 1
1/4" = 1'-0"

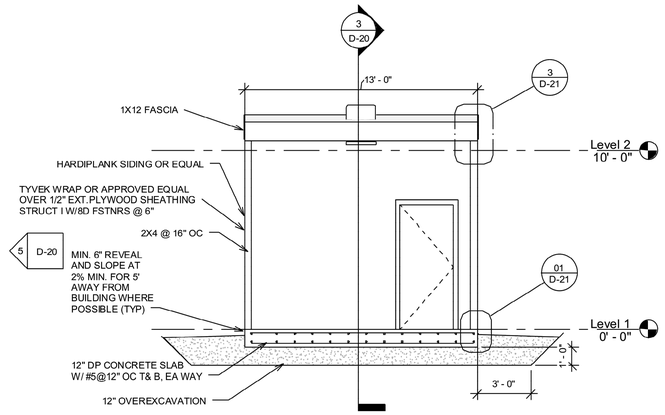


NOTES:

1. SLOPE FLOOR TO DRAIN

2 Section 1
1/4" = 1'-0"

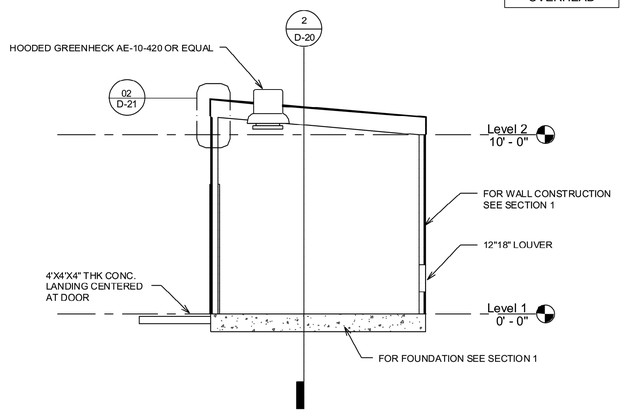


3 Section 2
1/4" = 1'-0"

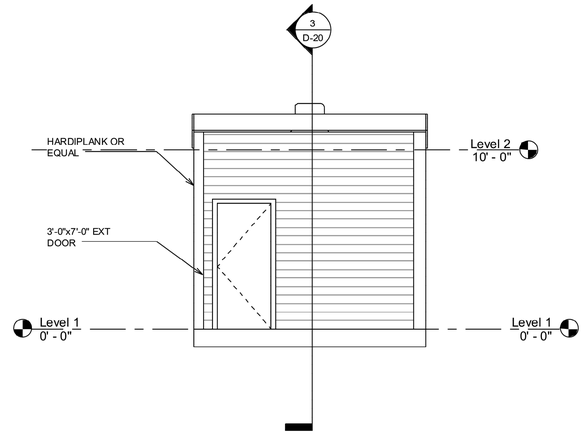


4 NORTH ELEVATION
1/4" = 1'-0"

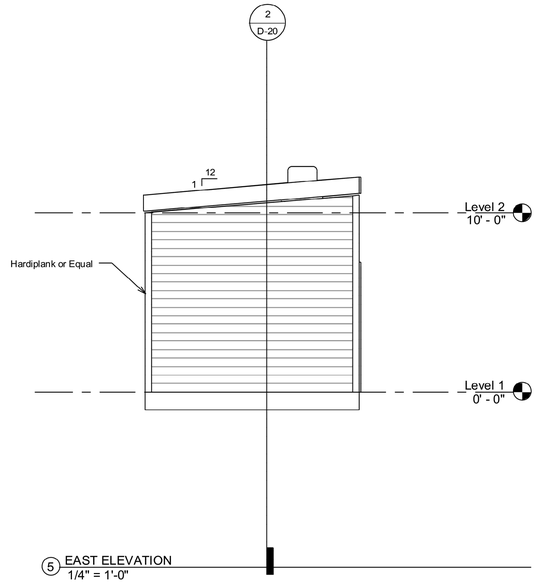


5 EAST ELEVATION
1/4" = 1'-0"

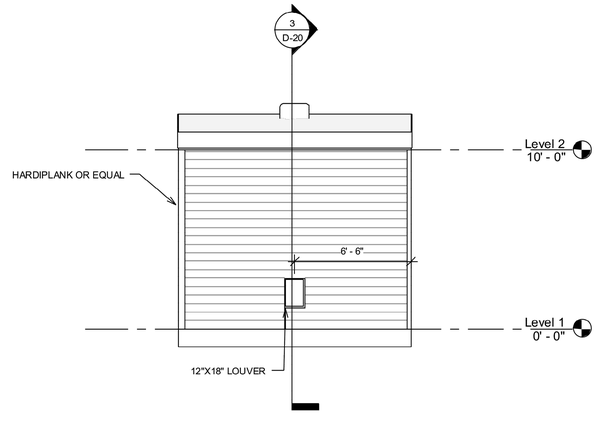


6 SOUTH ELEVATION
1/4" = 1'-0"

WARNING
POWER LINES OVERHEAD

811
Know what's below. Call before you dig.

COPYRIGHT 2021 by PROVOST & PRITCHARD ENGINEERING GROUP, INC. ALL RIGHTS RESERVED
The firm of Provost & Pritchard Engineering Group, Inc. expressly reserves its common law copyright and other applicable property rights in these plans. These plans are not to be reproduced, changed, or copied in any form or manner whatsoever, nor are they to be assigned to a third party without first obtaining the written permission and consent of Provost & Pritchard Engineering Group, Inc. In the event of unauthorized reuse of these plans by a third party, the third party shall hold the firm of Provost & Pritchard Engineering Group, Inc. harmless, and shall bear the cost of Provost & Pritchard Engineering Group, Inc.'s legal fees associated with defending and enforcing these rights.

| No. | REVISION | BY | DATE |
|---|---|---|---|
| | BID ISSUE 10-12-2021 | | |

REGISTERED PROFESSIONAL ENGINEER
DEMA R. TRAYNA
No. 35580
CIVIL
STATE OF CALIFORNIA

DATE SIGNED: 10/12/2021

1,2,3–TCP REMOVAL PROJECT FOR CONEJO WELLS
CAMROSA WATER DISTRICT
CAMARILLO, CA

DETAILS
ANALYZER BUILDING STRUCTURAL DETAILS

EST. 1968
PROVOST & PRITCHARD
CONSULTING GROUP
An Employee Owned Company
455 W FIR AVENUE
CLOVIS, CALIFORNIA 93611
559449-2700 FAX 559449-2715
https://provostandpritchard.com/

DESIGN ENGINEER: KEVIN BERRYHILL
LICENSE NO: 70415

| DRAFTED BY: | CHECKED BY: |
|---|---|
| JB | RKB |

DATE: 10/11/2021
JOB NO: 295820002
PROJECT NO: 295820002
PHASE:
0 1"
ORIGINAL SCALE SHOWN IS ONE INCH. ADJUST SCALE FOR REDUCED OR ENLARGED PLANS.

SHEET D-20



10/12/2021 9:52 AM \\ppeng.com\pzdata\clients\Camrosa Water District-2958\295820002-Camrosa GAC Design Project\300 CAD\340 Sheet Sets\04_Civil_Details\D-16 ENCLOSURE STRUCTURAL DETAILS.dwg -Michael McConnell

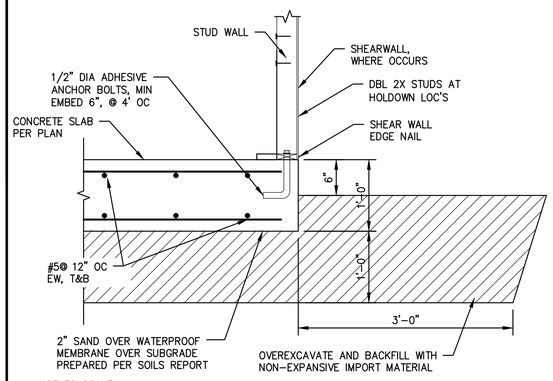


NOT TO SCALE

1 D-21

## WALL AT FOUNDATION

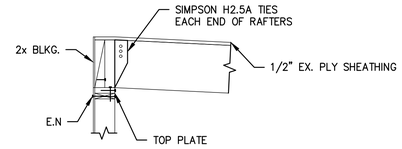


2 D-21

## ROOF AT BEARING WALL

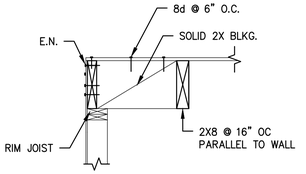


NOT TO SCALE

3 D-21

## ROOF AT NON-BEARING WALL

SL-0121

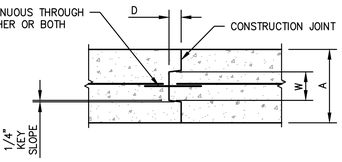


NOTES
1. KEYS ARE REQUIRED FOR HORIZONTAL CONSTRUCTION JOINTS.
2. FOR SUSPENDED SLABS, PROVIDE A KEY FOR AT LEAST 50% OF THE CONSTRUCTION JOINT LENGTH.

| THICKNESS OF SLAB OR WALL "A" | NOMINAL KEY SIZE DxW |
|---|---|
| LESS THAN 8" | 2x3 |
| 9" TO 12" | 2x4 |
| 13" TO 18" | 2x6 |
| 19" TO 24" | 2x8 |
| MORE THAN 24" | 2x12 |

NOT TO SCALE

4 D-21

## CONCRETE LONGITUDINAL JOINT

SL-0124

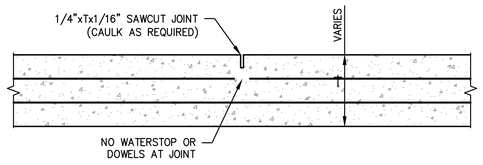


NOTES
1. IF SINGLE LAYER REINFORCEMENT, EVERY OTHER BAR IS DISCONTINUOUS AT JOINT.
2. IF 2 LAYERS REINFORCEMENT, TOP LAYER IS COMPLETELY DISCONTINUOUS AT JOINT.
3. JOINT FORMED WITH TOOL OR INSERT STRIP MAY BE SUBSTITUTED FOR SAWED TYPE ONLY WITH PRIOR ACCEPTANCE BY THE ENGINEER.
4. SAWED JOINT MUST BE CONSTRUCTED WITHIN 12 HOURS OF CONCRETE PLACEMENT.

NOT TO SCALE

5 D-21

## CONCRETE CONTROL JOINT

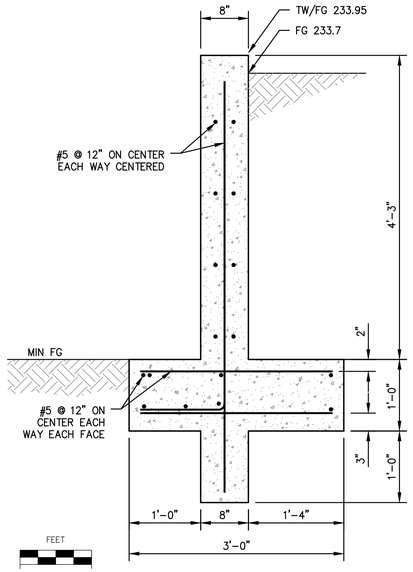


6 D-21

## RETAINING WALL

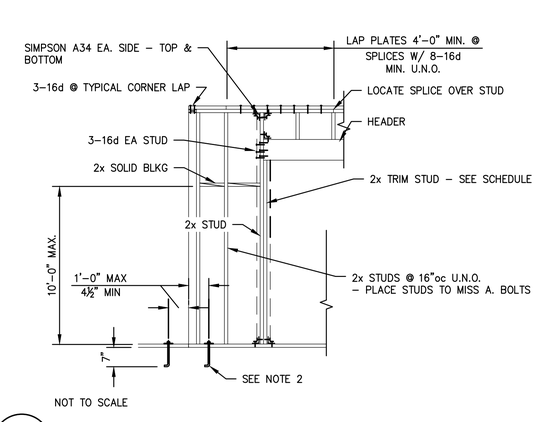


NOT TO SCALE

8 D-21

## WALL INTERSECTION DETAIL

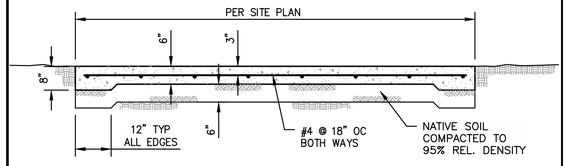


NOT TO SCALE

10 D-21

## CONCRETE PAVEMENT SECTION

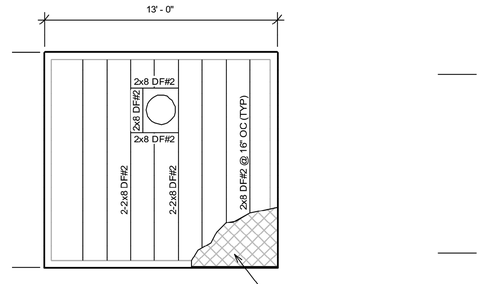


7 Roof Plan
1/4" = 1'-0"

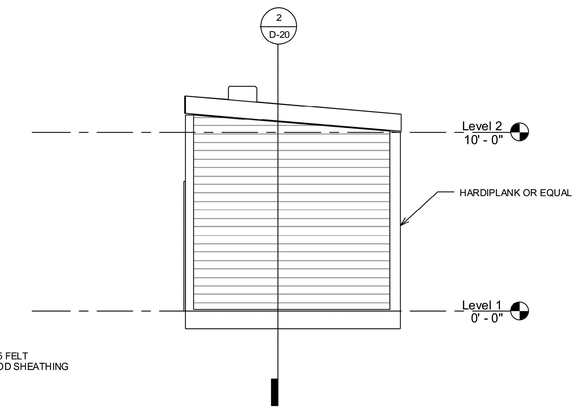


11 West Elevation
1/4" = 1'-0"




NOT TO SCALE

9 D-21

## TYPICAL STUD WALL CONSTRUCTION AT DOOR FRAME

NOTES
1. ERECTION STABILITY - SHORING AND BRACING OF STUDS & WALLS DURING CONSTRUCTION & ERECTION IS THE RESPONSIBILITY OF THE CONTRACTOR
2. A1/2"ø X6" EMBED A.BOLTS @ 4'-0" MAX. W/ 1/4"X3" SQUARE WASHER PLATE.

COPYRIGHT 2021 by PROVOST & PRITCHARD ENGINEERING GROUP, INC. ALL RIGHTS RESERVED
The firm of Provost & Pritchard Engineering Group, Inc. expressly reserves its property rights, including copyright and other applicable property rights in these plans. These plans are not to be reproduced, changed, or copied in any form or manner whatsoever, nor are they to be assigned to a third party without first obtaining the expressed written permission and consent of Provost & Pritchard Engineering Group, Inc. In the event of unauthorized reuse of these plans by a third party, the third party agrees to hold Provost & Pritchard Engineering Group, Inc. harmless, and shall indemnify Provost & Pritchard Engineering Group, Inc. for all losses associated with defending and enforcing these rights.

| No. | REVISION | BY | DATE |
|---|---|---|---|

BID ISSUE
10-12-2021

REGISTERED PROFESSIONAL ENGINEER
KEVIN R. BERRYHILL
No. 35580
STATE OF CALIFORNIA
CIVIL

DATE SIGNED: 10/12/2021

1,2,3-TCP REMOVAL PROJECT FOR
CONEJO WELLS
CAMROSA WATER DISTRICT
CAMARILLO, CA

DETAILS

STRUCTURAL DETAILS

PROVOST & PRITCHARD CONSULTING GROUP
EST. 1962
An Employee Owned Company
286 W. CROMWELL AVENUE
FRESNO, CA 93711
559.449.2700 FAX 559.449.2715
https://provostandpritchard.com/

DESIGN ENGINEER: KEVIN BERRYHILL
LICENSE NO: 70415
DRAFTED BY: JB
CHECKED BY: RKB
DATE: 10/11/2021
JOB NO: 295820002
PROJECT NO: 295820002
PHASE:
0 1"
ORIGINAL SCALE SHOWN IS ONE INCH. ADJUST SCALE FOR REDUCED OR ENLARGED PLANS.

SHEET D-21
37 OF 54

10/12/2021 9:54 AM \\ppeng.com\prjdata\clients\Camrosa Water District-295820002-Camrosa GAC Design Project\300 CAD\340 Sheet Sets\04_Civil_Details\D-17 STRUCTURAL DETAILS.dwg -Michael McConnell

STRC

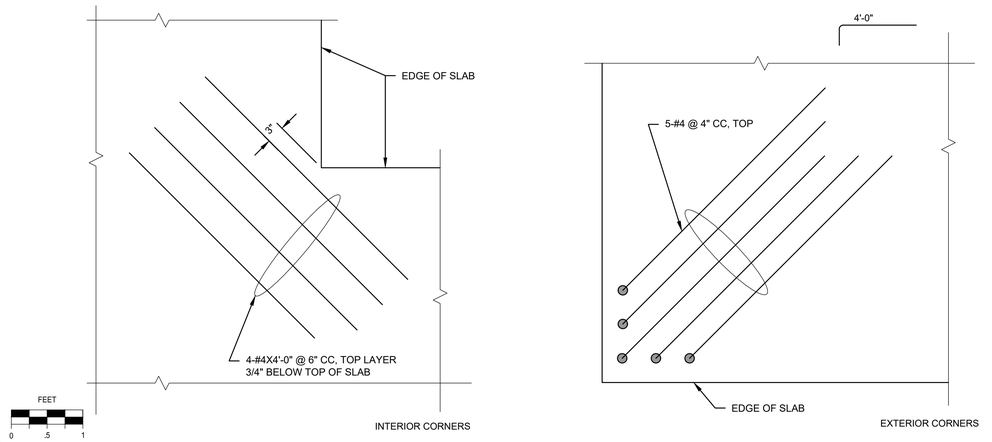


1 / D-22

## INTERIOR AND EXTERIOR CORNERS

STRC

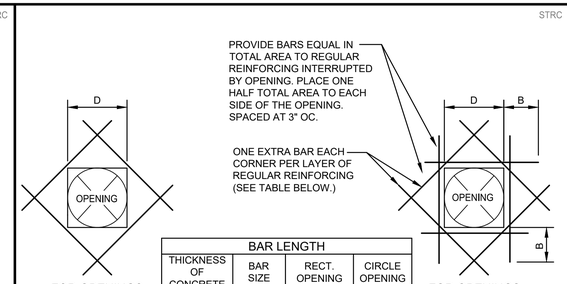


| BAR LENGTH | | | |
|---|---|---|---|
| THICKNESS OF CONCRETE | BAR SIZE | RECT. OPENING | CIRCLE OPENING |
| < 12" | #4 | 3'-0" | D+24" |
| 12" - 18" | #5 | 3'-0" | D+24" |
| >18" | #6 | 3'-8" | D+24" |
| B = THE REQUIRED LENGTH FOR LAPPED SPLICE FOR TOP BARS AS SHOWN IN CONC. REINFORCEMENT SPLICE TABLE. | | | |

NOTE
THIS DETAIL APPLIES TO ALL OPENINGS IN WALLS AND SLABS THAT DO NOT RETAIN LIQUID OR SOIL

2 / D-22

## CONCRETE OPENING REINFORCEMENT WITHOUT LIQUID OR SOIL

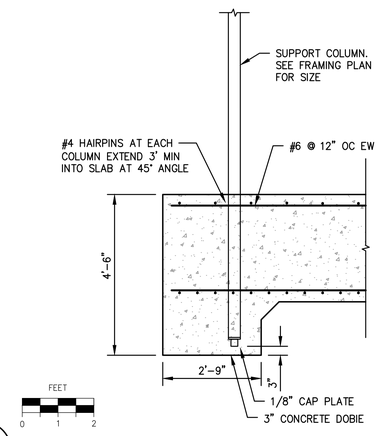


4 / D-22

## HYDROXIDE ENCLOSURE STRUCTURE POST

SL-0106

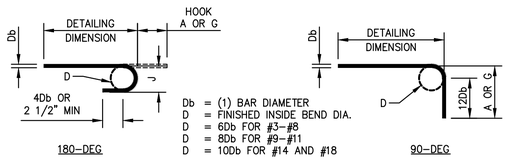


Db = (1) BAR DIAMETER
D = FINISHED INSIDE BEND DIA.
D = 6Db FOR #3-#8
D = 8Db FOR #9-#11
D = 10Db FOR #14 AND #18

| DIMENSION OF STANDARD 180° HOOKS, ALL GRADES | | | | DIMENSION OF STANDARD 90° HOOKS, ALL GRADES | |
|---|---|---|---|---|---|
| SIZE | D | J | A OR G | D | A OR G |
| #3 | 2 1/4" | 3" | 5" | 2 1/4" | 6" |
| #4 | 3" | 4" | 6" | 3" | 8" |
| #5 | 3 3/4" | 5" | 7" | 3 3/4" | 10" |
| #6 | 4 1/2" | 6" | 8" | 4 1/2" | 12" |
| #7 | 5 1/4" | 7" | 10" | 5 1/4" | 14" |
| #8 | 6" | 8" | 11" | 6" | 16" |
| #9 | 9 1/2" | 11 3/4" | 15" | 9 1/2" | 19" |
| #10 | 10 3/4" | 13 1/4" | 17" | 10 3/4" | 22" |
| #11 | 12" | 14 3/4" | 19" | 12" | 24" |
| #14 | 18 1/4" | 21 3/4" | 27" | 18 1/4" | 31" |
| #18 | 24" | 28 1/2" | 36" | 24" | 41" |

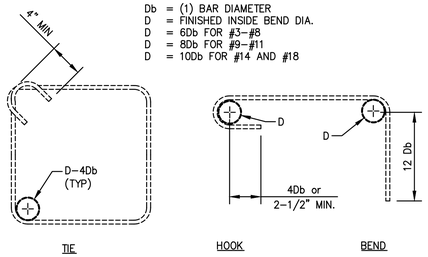


Db = (1) BAR DIAMETER
D = FINISHED INSIDE BEND DIA.
D = 6Db FOR #3-#8
D = 8Db FOR #9-#11
D = 10Db FOR #14 AND #18

REINFORCEMENT BENDS

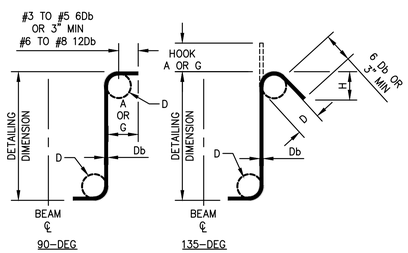


STIRRUP HOOKS
(TIE BENDS SIMILAR)

| 90° | | | 135° | |
|---|---|---|---|---|
| SIZE | D | A OR G | A OR G | ARROX. H |
| #3 | 1 1/2" | 4" | 4" | 2 1/2" |
| #4 | 2" | 4 1/2" | 4 1/2" | 3" |
| #5 | 2 1/2" | 6" | 5 1/2" | 3 3/4" |
| #6 | 4 1/2" | 12" | 8" | 4 1/2" |
| #7 | 5 1/4" | 14" | 9" | 5 1/4" |
| #8 | 6" | 16" | 10 1/2" | 6" |

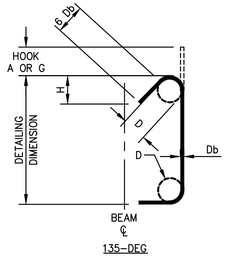


SEISMIC STIRRUP/TIE

| 135° SEISMIC HOOK | | | |
|---|---|---|---|
| SIZE | D | A OR G | ARROX. H |
| #3 | 1 1/2" | 4" | 2 1/2" |
| #4 | 2" | 4 1/2" | 3" |
| #5 | 2 1/2" | 5 1/2" | 3 3/4" |
| #6 | 4 1/2" | 8" | 4 1/2" |
| #7 | 5 1/4" | 9" | 5 1/4" |
| #8 | 6" | 10 1/2" | 6" |

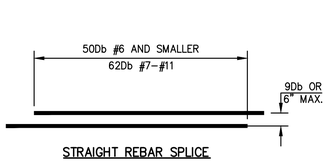


STRAIGHT REBAR SPLICE

| SPLICE LENGTH / Db | | | | | |
|---|---|---|---|---|---|
| | CONCRETE STRENGTH (PSI) | | | | |
| | 2500 | 3000 | 3500 | 4000 | 5000 |
| #6 AND SMALLER | 63 | 57 | 53 | 50 | 45 |
| #7-#11 | 78 | 72 | 66 | 62 | 56 |

NOTE

1. SPLICES SHOWN ARE CLASS B SPLICE fy=60ksi f'c=4ksi CALCULATED PER ACI 318-14 SECTION 25.4.2.2. SEE CHART FOR DIFFERENT CONCRETE STRENGTHS.
2. SPLICES ASSUME THE MODIFICATION FACTORS OF ACI 318 SECTION 25.4.2.4 ARE 1.0 FOR OTHER CONDITIONS PROVIDE SPLICE LENGTHS IN ACCORDANCE WITH ACI 318.

NOT TO SCALE

3 / D-22

## REINFORCEMENT BENDS & SPLICES

NOTES

SCREW ATTACHMENT AS SHOWN.
#1-ATTACHMENT SCREWS = SELF-DRILLER #8 SS SCREWS 6" OC
#2-SIDE LAP SCREWS = SELF-DRILLER #8 SS SCREWS 6" OC
WASHERED SCREWS PER MANUFACTURER

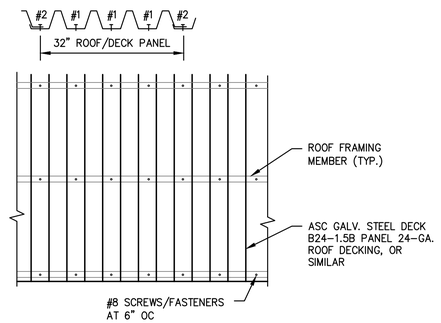


NOT TO SCALE

5 / D-22

## ROOF DECKING ATTACHMENT

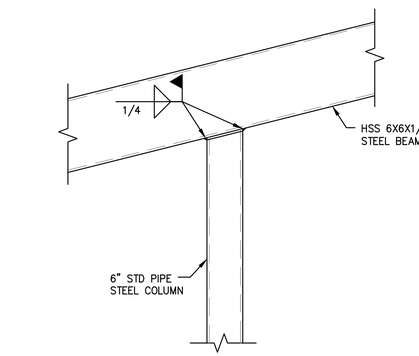


ELEVATION

NOT TO SCALE

6 / D-22

## COLUMN BEAM CONNECTION

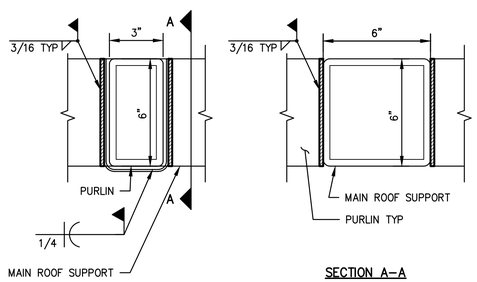


NOTES

1. NOTIFY ENGINEER IF FABRICATOR PROPOSES ALTERNATE PURLIN CONNECTION.
2. VERIFY PLATE DIMENSIONS WITH MANUFACTURER/FABRICATOR.

FEET
0 2 4

7 / D-22

## INSET PURLIN CONNECTION

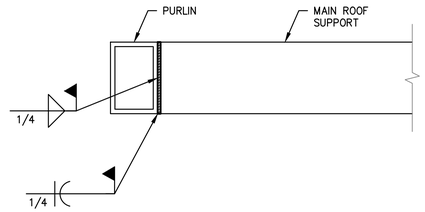


NOT TO SCALE

8 / D-22

## PURLIN TO MAIN ROOF SUPPORT CONNECTION AT END

COPYRIGHT 2021 by PROVOST & PRITCHARD ENGINEERING GROUP, INC. ALL RIGHTS RESERVED
The firm of Provost & Pritchard Engineering Group, Inc. expressly reserves its property rights, including copyright and other applicable property rights in these plans. These plans are not to be reproduced, changed, or copied in any form or manner whatsoever nor are they to be assigned to a third party without first obtaining the expressed written permission and consent of Provost & Pritchard Engineering Group, Inc. In the event of unauthorized reuse of these plans by a third party, Provost & Pritchard Engineering Group, Inc. shall be indemnified and held harmless by the third party. Provost & Pritchard Engineering Group, Inc. hereby reserves its rights to all fees associated with generating and protecting these rights.

BID ISSUE
10-12-2021

| No. | REVISION | BY | DATE |
|---|---|---|---|

REGISTERED PROFESSIONAL ENGINEER R. RAJAM No. 35580 STATE OF CALIFORNIA CIVIL

DATE SIGNED: 10/12/2021

1,2,3-TCP REMOVAL PROJECT FOR
CONEJO WELLS
CAMROSA WATER DISTRICT
CAMARILLO, CA

DETAILS

STRUCTURAL DETAILS

EST. 1963
PROVOST& PRITCHARD CONSULTING GROUP
An Employee Owned Company
1000 W. TAFT AVENUE
CLOVIS, CALIFORNIA 93611
559 449-2700 FAX 559 449-2715
https://provostandpritchard.com/

DESIGN ENGINEER: KEVIN BERRYHILL
LICENSE NO: 70415

| DRAFTED BY: | CHECKED BY: |
|---|---|
| JB | RKB |

DATE: 10/11/2021
JOB NO: 295820002
PROJECT NO: 295820002
PHASE:

0 1"
ORIGINAL SCALE SHOWN IS ONE INCH. ADJUST SCALE FOR REDUCED OR ENLARGED PLANS.

SHEET D-22
38 OF 54

10/12/2021 9:56 AM \\ppeng.com\pzdata\clients\Camrosa Water District-295#\295820002-Camrosa GAC Design Project\300 CAD\340 Sheet Sets\04_Civil_Details\D-18 STRUCTURAL DETAILS.dwg -Michael McConnell

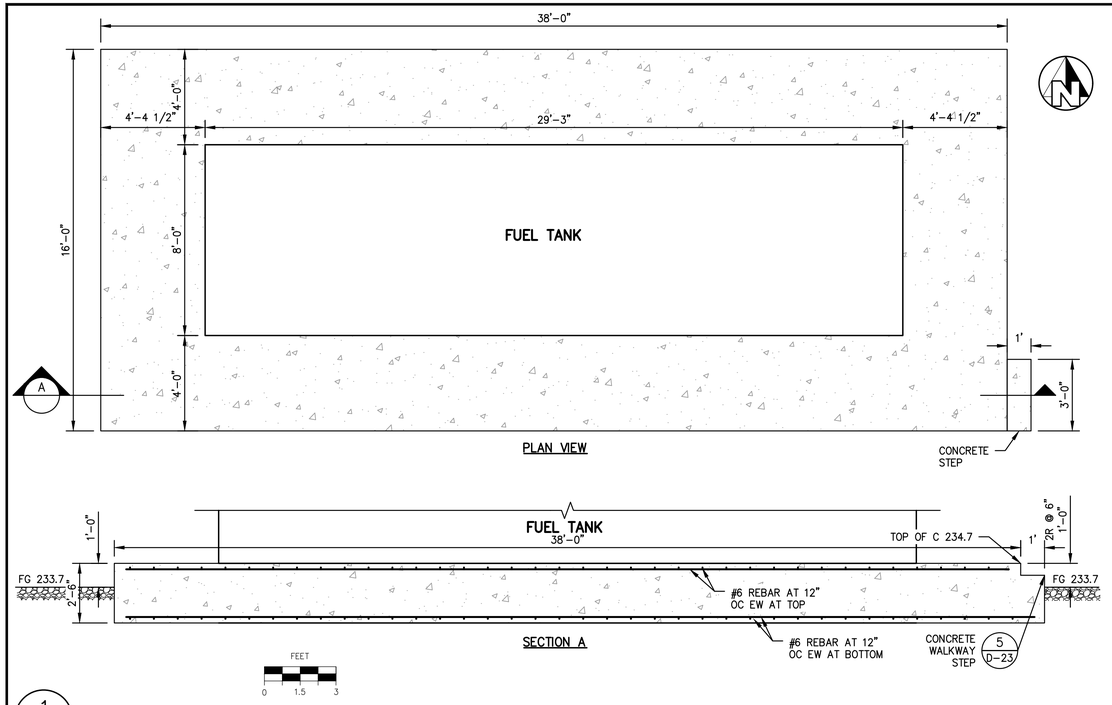


1 / D-23

FUEL TANK CONCRETE WALKWAY

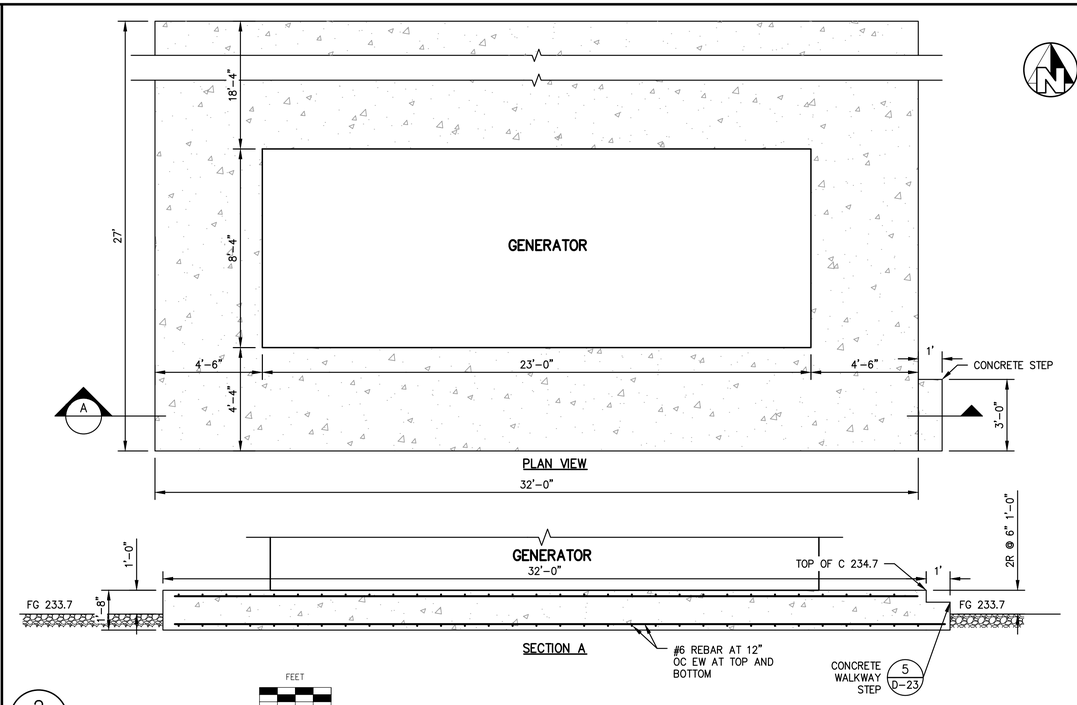


2 / D-23

GENERATOR CONCRETE WALKWAY

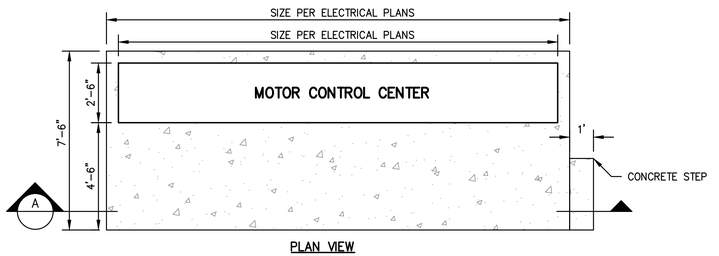


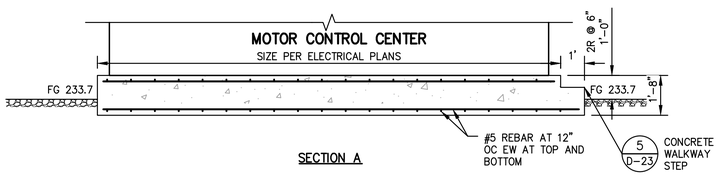


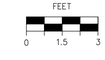


3 / D-23

MCC CONCRETE WALKWAY

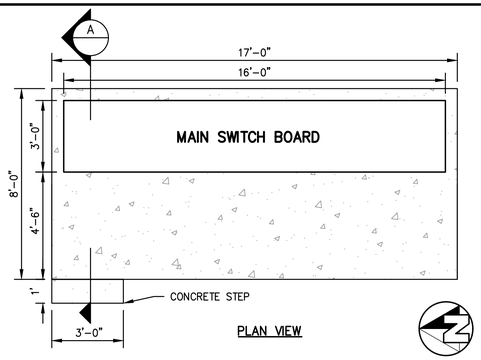


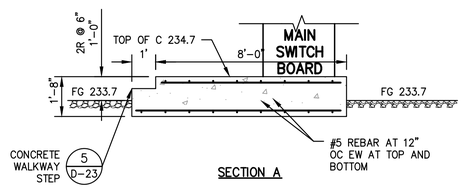





4 / D-23

MAIN SWITCH BOARD CONCRETE WALKWAY

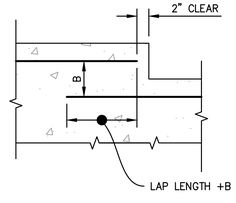


NOT TO SCALE

5 / D-23

CONCRETE WALKWAY STEP

COPYRIGHT 2021 by PROVOST & PRITCHARD
ENGINEERING GROUP, INC. ALL RIGHTS RESERVED
The firm of Provost & Pritchard Engineering Group, Inc. expressly reserves its common law copyright and other applicable property rights in these plans. These plans are not to be reproduced, changed, or copied in any form or manner whatsoever, nor are they to be assigned to a third party without first obtaining the express written permission and consent of Provost & Pritchard Engineering Group, Inc. In the event of unauthorized reuse of these plans by a third party, the third party agrees to hold Provost & Pritchard Engineering Group, Inc. harmless, and shall indemnify Provost & Pritchard Engineering Group, Inc. for all loss, liability, damages, and costs (including attorney's fees) associated with defending and enforcing these rights.

BID ISSUE
10-12-2021

| No. | REVISION | BY | DATE |
|---|---|---|---|

REGISTERED PROFESSIONAL ENGINEER
KEVIN R. BERRYHILL
No. 35580
STATE OF CALIFORNIA
CIVIL

DATE SIGNED: 10/12/2021

1,2,3-TCP REMOVAL PROJECT FOR
CONEJO WELLS
CAMROSA WATER DISTRICT
CAMARILLO, CA

DETAILS

STRUCTURAL DETAILS

PROVOST & PRITCHARD
EST 1968
CONSULTING GROUP
An Employee Owned Company
286 W. CYPRESS AVENUE
VISALIA, CA 93277-3611
559/449-2700 FAX 559/449-2715
https://provostandpritchard.com/

DESIGN ENGINEER:
KEVIN BERRYHILL
LICENSE NO:
70415

| DRAFTED BY: | CHECKED BY: |
|---|---|
| JB | RKB |

DATE: 10/11/2021
JOB NO: 295820002
PROJECT NO: 295820002
PHASE:

0 1"
ORIGINAL SCALE SHOWN IS ONE INCH. ADJUST SCALE FOR REDUCED OR ENLARGED PLANS.

SHEET D-23

39 OF 54

10/12/2021 9:56 AM \\ppeng.com\prodata\clients\Camrosa Water District-2958\295820002-Camrosa GAC Design Project\300 CAD\340 Sheet Sets\04_Civil_Details\D-23 WALKWAY DETAILS.dwg -Michael McConnell

## ELECTRICAL COMPLIANCE NOTES

THE INTENT OF THE DRAWINGS AND SPECIFICATION IS TO CONSTRUCT THE PROPOSED BUILDING IN ACCORDANCE WITH TITLE 24, CALIFORNIA CODE OF REGULATIONS.

ALL WORK PERFORMED UNDER THIS CONTRACT SHALL CONFORM TO THE FOLLOWING CODES AND REGULATIONS AS APPLICABLE:

- 2019 CALIFORNIA ADMINISTRATIVE CODE (CAC)
  - PART 1, TITLE 24, CALIFORNIA CODE OF REGULATIONS (CCR)
- 2019 CALIFORNIA BUILDING CODE (CBC)
  - PART 2, TITLE 24, CCR
  - BASED ON THE 2015 INTERNATIONAL BUILDING CODE (IBC)
- 2019 CALIFORNIA ELECTRICAL CODE (CEC)
  - PART 3, TITLE 24, CCR
  - BASED ON THE 2014 NATIONAL ELECTRICAL CODE (NEC)
- 2019 CALIFORNIA MECHANICAL CODE (CMC)
  - PART 4, TITLE 24, CCR
  - BASED ON THE 2015 UNIFORM MECHANICAL CODE (UMC)
- 2019 CALIFORNIA PLUMBING CODE (CPC)
  - PART 5, TITLE 24, CCR
  - BASED ON THE 2015 UNIFORM PLUMBING CODE (UPC)
- 2019 CALIFORNIA FIRE CODE (CFC)
  - PART 9, TITLE 24, CCR
  - BASED ON THE 2015 INTERNATIONAL FIRE CODE (IFC)

UNLESS OTHERWISE STATED, IT IS INTENDED THAT THE ABOVE CODES AND REGULATIONS REFER TO THE LATEST EDITION OR REVISION IN EFFECT ON THE DATE OF THE CONTRACT. NOTHING ON THE DRAWING IS TO BE CONSTRUED AS REQUIRING OR PERMITTING WORK THAT IS CONTRARY TO THE ABOVE LISTED CODES AND REGULATIONS, OR OTHER LOCAL, STATE OR FEDERAL CODES OR REGULATIONS WHICH MAY BE APPLICABLE.

## GENERAL ELECTRICAL LEGEND

- CONCRETE PULL BOX –SIZE AS NOTED – LIDS AS NOTED 'P' POWER, 'S' SIGNAL, 'F' FIRE ALARM & 'D' DATA; '–T' DENOTES TRAFFIC LID
- CONDUIT –SURFACE MOUNTED OR ABOVE CEILING –EMT WITH COMPRESSION FITTING UNLESS NOTED ON PLANS
- CONDUIT –CONCEALED BELOW FLOOR IN EMT OR UNDERGROUND IN PVC SCH 40 WITH IMC ELBOWS
- HOMERUN TO PERSPECTIVE PANEL OR CABINET –BRANCH CIRCUIT WITH OUT FURTHER DESIGNATION IS A #12 WIRE CIRCUIT (GROUND, NEUTRAL, XX WIRE SIZE, CKT. WIRE)
- FLEX
- TERMINAL CABINET
- PANEL BOARD –SEE SCHEDULE
- MOTOR/EXHAUST FAN –N.I.E.S. –CONNECT AS REQUIRED
- JUNCTION BOX –4 11/16" x 2 1/8" SQUARE OR SMALL
- JUNCTION BOX –LARGER THAN 4 11/16" x 2 1/8" SQUARE
- FUSED DISCONNECT SWITCH –SIZE AS NOTED –30A. SHOWN
- FEEDER CALLOUT
- CONDUIT STUB DOWN
- CONDUIT STUB UP
- CONDUIT CAP
- CONDUIT BREAK

## ELECTRICAL ABBREVIATIONS:

| | |
|---|---|
| Δ | DELTA CONNECTED |
| Y | WYE CONNECTED |
| 0 | PHASE |
| & | AND |
| @ | AT |
| ' | FEET |
| " | INCHES |
| A | AMPERES |
| AC | ALTERNATING CURRENT |
| ACT | ABOVE COUNTERTOP/BACKSPLASH |
| ADJ | ADJACENT, ADJOINING |
| AFD | ADJUSTABLE FREQUENCY DRIVE |
| AFF | ABOVE FINISHED FLOOR |
| AFG | ABOVE FINISHED GRADE |
| AL | ALUMINUM |
| APPROX | APPROXIMATE |
| ARCH | ARCHITECT |
| AUTO | AUTOMATIC |
| AUX | AUXILIARY |
| ALT | ALTERNATE |
| AWG | AMERICAN WIRE GAUGE |
| B | BARE |
| BC | BARE COPPER GROUND |
| BKBD | BACKBOARD |
| BRKR | BREAKER |
| BLDG | BUILDING |
| C | CONDUIT OR CONTRACTOR |
| CAB | CABINET |
| CATV | CABLE TELEVISION |
| CKT | CIRCUIT |
| CLG | CEILING |
| CO | CONDUIT ONLY |
| COMM | COMMUNICATION |
| CONC | CONCRETE |
| CONN | CONNECT |
| CONT | CONTINUATION OR CONTINUED |
| COORD | COORDINATE |
| CR | CONTROL RELAY |
| CT | CURRENT TRANSFORMER |
| COMP | COMPRESSOR |
| CU | COPPER |
| DC | DIRECT CURRENT |
| DET | DETAIL |
| DI | DISCREET INPUT |
| DISC | DISCONNECT |
| DIST | DISTRIBUTION |
| DLO | WIRE TYPE – SEE SPECS. |
| DSA | DIVISION OF THE STATE ARCHITECT |
| DWG | DRAWING |
| (E), EXIST | EXISTING |
| EC | ELECTRICAL CONTRACTOR |
| EL, ELEV | ELEVATION |
| EL | EMERGENCY LIGHT |
| ELECT | ELECTRICAL |
| EMS | ENERGY MANAGEMENT SYSTEM |
| EMT | ELECTRICAL METALLIC TUBING |
| EOL | END OF LINE |
| ENCL | ENCLOSURE |
| EP | EXPLOSION PROOF |
| EQUIP | EQUIPMENT |
| ETC | ET CETERA |
| EVAP | EVAPORATOR |

| | |
|---|---|
| (F) | FUTURE |
| FA | FIRE ALARM |
| FACP | FIRE ALARM CONTROL PANEL |
| FAT | FIRE ALARM TERMINAL CABINET |
| FIXT | FIXTURE |
| FLA | FULL LOAD AMPS |
| FLEX | FLEXIBLE |
| FLUOR | FLUORESCENT |
| FS | FLOW SWITCH |
| FOR | FORWARD–OFF–REVERSE |
| FT | FEET |
| GALV | GALVANIZED |
| GND | GROUND |
| GC | GENERAL CONTRACTOR |
| HI | HIGH |
| HOA | HAND–OFF–AUTO |
| HOS | HAND–OFF–STANDBY |
| HV | HIGH VOLTAGE |
| HVAC | HEATING, VENTILATION, AIR CONDITIONING |
| IDF | INTERMEDIATE DISTRIBUTION FRAME |
| INCAN | INCANDESCENT |
| IDC | INITIATING DEVICE CIRCUIT |
| IN | INCHES |
| INST | INSTANTANEOUS |
| J | JUNCTION BOX |
| KV | KILOVOLTS |
| KVA | KILOVOLT AMPERES |
| KW | KILOWATTS |
| L | LINE |
| LB | ELBOW |
| LF | LINEAR FEET |
| LFMC | LIQUID FILLED METAL CONDUIT |
| LOS | LOCKOUT–STOP |
| LOH | LOCK–OFF–HALT |
| LV | LOW VOLTAGE |
| M | MOTOR |
| MAX | MAXIMUM |
| MCA | MINIMUM CIRCUIT AMPS |
| MCC | MOTOR CONTROL CENTER |
| MCM | THOUSAND CIRCULAR MILLS |
| MCP | MOTOR CIRCUIT PROTECTOR |
| MDF | MAIN DISTRIBUTION FRAME |
| MECH | MECHANICAL |
| MFG | MANUFACTURER |
| MIN | MINIMUM |
| MPOE | MAIN POINT OF ENTRY |
| MSB | MAIN SWITCHBOARD |
| N | NEUTRAL |
| (N) | NEW |
| NA | NON–AUTOMATIC |
| NAC | NOTIFICATION APPLIANCE CIRCUIT |
| NC | NORMALLY CLOSED |
| NIES | NOT IN ELECTRICAL SECTION |
| NIC | NOT IN ELECTRICAL CODE |
| NO., # | NUMBER |
| NO | NORMALLY OPEN |
| NL | NIGHT LIGHT |

| | |
|---|---|
| OC | ON CENTER |
| OH | OVERHEAD |
| OL | THERMAL OVERLOAD RELAY |
| OT | OVER TEMPERATURE |
| OSHPD | OFFICE OF STATEWIDE HEALTH PLANNING AND DEVELOPMENT |
| P | POLE |
| PA | PUBLIC ADDRESS |
| PB | PULL BOX |
| PNL | PANEL |
| PH | PHASE |
| PR | PAIR |
| PRI | PRIMARY |
| PS | PRESSURE SWITCH |
| PWR | POWER |
| (R) | REMOVE(D) |
| RA | REMOTE ANNUNCIATOR |
| RD | ROAD |
| REQD | REQUIRED |
| REQMTS | REQUIREMENTS |
| RGP | REDUNDANT GROUND PATH |
| RHW | WIRE TYPE– SEE SPECS. |
| RM | ROOM |
| RECP | RECEPTACLE |
| RT | RAIN TIGHT |
| SCH | SCHEDULE |
| SEC | SECONDS, SECONDARY |
| SHT | SHEET |
| SIG | SIGNAL |
| SPECS | SPECIFICATIONS |
| SP | SPARE |
| SW | SWITCH |
| SWD | SWITCHED |
| STD | STANDARD |
| STR | STRANDED |
| SWBD | SWITCHBOARD |
| TELE | TELEPHONE |
| TEMP | TEMPERATURE |
| TOA | TEST OFF AUTOMATIC |
| TH | THERMOSTAT |
| TRANSF | TRANSFORMER |
| TYP | TYPICAL |
| TSP | TWISTED SHIELDED PAIR |
| THRU | THROUGH |
| UG | UNDERGROUND |
| UNO | UNLESS NOTED OTHERWISE |
| V | VOLTS |
| VA | VOLT AMPS |
| VFD | VARIABLE FREQUENCY DRIVE |
| VM | VOLT METER |
| W | WIRE |
| W/ | WITH |
| W/O | WITHOUT |
| WP | WEATHERPROOF |
| WHD | WATT HOUR DEMAND METER |
| WM | WATT METER |
| WH | WATER HEATER |
| XFMER | TRANSFORMER |
| (XR) | REMOVE AND RELOCATE(D) |

## GENERAL ELECTRICAL NOTES

1. PROVIDE ALL LABOR, MATERIALS, TOOLS, PLANT EQUIPMENT, TRANSPORTATION AND PERFORM ALL OPERATIONS NECESSARY FOR THE PROPER EXECUTION AND COMPLETION OF ALL ELECTRICAL WORK REQUIRED FOR THE COMPLETE AND OPERATING SYSTEMS AS OUTLINED WITHIN THE SCOPE OF WORK.
2. UNDERWRITERS LABORATORIES, INC., SHALL MEET THEIR REQUIREMENTS AND SHALL BEAR THEIR LABEL WHEREVER STANDARDS HAVE BEEN ESTABLISHED AND LABEL SERVICE IS REGULARLY FURNISHED BY THAT AGENCY.
3. THE SIZE AND LOCATIONS OF EQUIPMENT ARE SHOWN TO SCALE WHEREVER POSSIBLE, CONTRACTOR SHALL MAKE USE OF ALL DATA IN ALL CONTRACT DOCUMENTS AND VERIFY THIS INFORMATION AT THE SITE.
4. CONDUCTORS SHALL BE COPPER CONDUCTORS TYPE AS NOTED ON CONSTRUCTION DOCUMENTS.
5. CONTRACTOR SHALL ASSUME SOLE RESPONSIBILITY FOR SAFETY OF ALL PERSONS ON OR ABOUT THE CONSTRUCTION SITE, IN ACCORDANCE WITH APPLICABLE LAWS AND CODES. GUARD ALL HAZARDS IN ACCORDANCE WITH THE SAFETY PROVISIONS OF THE LATEST MANUAL OF ACCIDENT PREVENTION PUBLISHED BY THE ASSOCIATED GENERAL CONTRACTORS OF AMERICA.
6. CLEAN ALL EXPOSED SURFACES AND NEW EQUIPMENT AFTER COMPLETION.
7. IF ANY PART OF THIS CONTRACTOR'S WORK DEPENDS UPON THE WORK OF A SEPARATE CONTRACTOR, THIS CONTRACTOR SHALL INSPECT SUCH OTHER WORK AND PROMPTLY REPORT IN WRITING TO THE PROJECT ENGINEER ANY DEFECTS IN SUCH OTHER WORK THAT RENDERS IT UNSUITABLE TO RECEIVE THE WORK OF THIS CONTRACTOR. FAILURE OF THIS CONTRACTOR TO SO INSPECT AND REPORT SHALL CONSTITUTE AN ACCEPTANCE OF THE OTHER CONTRACTOR'S WORK, EXCEPT AS TO DEFECTS WHICH MAY DEVELOP IN OTHER CONTRACTOR'S WORK AFTER EXECUTION OF THIS CONTRACTOR'S WORK.
8. WHEREVER MORE THAN ONE (1) MANUFACTURER'S PRODUCT IS SPECIFIED, THE FIRST–NAMED PRODUCT IS THE BASIS FOR THE PROJECT DESIGN AND THE USE OF ALTERNATIVE NAMED MANUFACTURER'S PRODUCTS OR SUBSTITUTES MAY REQUIRE MODIFICATIONS IN THE PROJECT DESIGN AND CONSTRUCTION. IF SUCH ALTERNATIVES ARE PROPOSED BY CONTRACTOR AND ARE FAVORABLY REVIEWED BY THE ENGINEER OF RECORD, THE CONTRACTOR SHALL ASSUME COSTS REQUIRED TO MAKE NECESSARY REVISIONS AND MODIFICATIONS INCLUDING ADDITIONAL COSTS TO THE OWNER FOR EVALUATIONS OF MODIFICATION OF THE PROJECT DESIGN SUBMITTED BY CONTRACTOR TO THE ENGINEER OF RECORD. SUBSTITUTED ITEMS THAT REQUIRE CALCULATIONS SHALL HAVE CALCULATIONS SUBMITTED WITH SHOP DRAWINGS BEFORE APPROVAL WILL BE CONSIDERED.
9. THE CONTRACTOR SHALL GUARANTEE THAT ALL WORK DONE UNDER THIS SPECIFICATION WILL BE FREE FROM FAULTY MATERIALS OR WORKMANSHIP AND HEREBY AGREES TO REPAIR OR REPLACE WITHOUT COST TO THE OWNER AND TO HIS SATISFACTION ALL DEFECTS OR IMPERFECTIONS APPEARING IN SAID WORK WITHIN A PERIOD OF ONE YEAR AFTER THE DATE OF FINAL ACCEPTANCE BY THE OWNER OF ALL WORK DONE UNDER THIS SPECIFICATION.
10. ALL ELECTRICAL EQUIPMENT EXPOSED TO WEATHER SHALL BE LISTED FOR EXTERIOR USE.

## GENERAL SITE NOTES

1. SAW CUT EXISTING A.C. OR CONCRETE FOR CONDUIT INSTALLATION. REPLACE A.C. WITH 2" A.C. OVER 4 1/2"AB OVER 90% REL. COMPACTED EARTH. RE–STRIPE AS REQUIRED –ALL TO OWNER'S SATISFACTION. REPLACE CONCRETE WITH 4" CONCRETE OVER 90% REL. COMPACTED EARTH, BROOM FINISH –ALL TO OWNER'S SATISFACTION.
2. LOCATE AND PRESERVE ALL UNDERGROUND UTILITIES. REPAIR ALL UTILITIES DAMAGED DURING CONSTRUCTION TO OWNER'S SATISFACTION.
3. ERECT AND MAINTAIN ALL REQUIRED SAFETY BARRICADES PER CALIFORNIA STATE STANDARD SPECIFICATIONS –TITLE 8, TITLE 24 & OSHA REQUIREMENTS.
4. SCHEDULE CONSTRUCTION WITH OWNER AND UTILITY COMPANY IN ADVANCE. SCHEDULE ALL ELECTRICAL OUTAGES WITH OWNER AND OBTAIN APPROVAL FOR THE SAME. INCLUDE ANY OVERTIME OR STANDBY GENERATORS AS REQUIRED IN THE BID.

811 Know what's below. Call before you dig.

WARNING POWER LINES OVERHEAD

## (##) PLAN NOTES:

SYMBOL

1. DISCONNECT & REMOVE (E) S.C.E. PAD MOUNTED SERVICE XFMER., PRIMARY, SECONDARY FEEDERS & CONCRETE PAD. COORDINATE EXACT LOCATION AND REQMTS. w/SOUTHERN CALIFORNIA EDISON & OWNER PRIOR TO DISCONNECTION AND REMOVAL.
2. DISCONNECT & REMOVE (E) 1200A. SERVICE, ELECTRICAL EQUIPMENT, CONTROL CABINET, CONDUCTORS/CABLING & RACEWAYS. COORDINATE EXACT LOCATIONS & REQMTS. w/ SOUTHER CALIFORNIA EDISON & OWNER PRIOR TO ROUGH–IN.
3. (E) PORTABLE GENERATOR PAD TO BE REMOVED.
4. (E) TANK TO BE REMOVED & REPLACED DISCONNECT & REMOVE (E) ELECTRICAL BOXES, SENSORS, RACEWAYS, CABLING/CONDUCTORS.
5. (E) WELL PUMP TO REMAIN, DISCONNECT & REMOVE (E) POWER AND CONTROL/SIGNAL RACEWAYS, CONDUCTORS/CABLING. RECONNECT TO (N) MCC4 & (N) PCM.
6. (E) BOOSTER PUMP(S) TO REMAIN. DISCONNECT & REMOVE (E) ASSOCIATED POWER AND CONTROL EQUIPMENT, RACEWAYS, CONDUCTORS/CABLING. RECONNECT TO (N) ELECTRICAL SYSTEM & (N) "PCM" CONTROL CABINET. COORDINATE EXACT LOCATION & REQMTS. w/OWNER PRIOR TO ROUGH–IN. SEE (N) ELECTRICAL SITE PLAN.

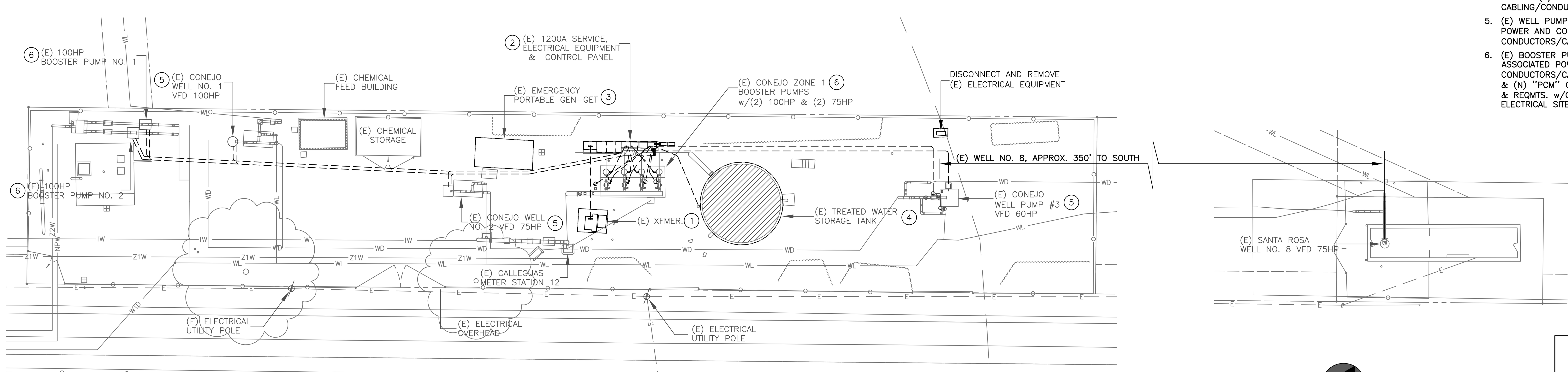


1 EXISTING SITE PLAN – ELECTRICAL DEMOLITION PLAN

SCALE: 1"=20'–0"

COPYRIGHT 2021 by PROVOST & PRITCHARD ENGINEERING GROUP, INC. ALL RIGHTS RESERVED The firm of Provost & Pritchard Engineering Group, Inc. expressly reserves its common law copyright and other applicable property rights in these plans. These plans are not to be reproduced, changed, or copied in any form or manner whatsoever, nor are they to be assigned to a third party without first obtaining the written permission and consent of Provost & Pritchard Engineering Group, Inc. In the event of unauthorized reuse of these plans by a third party, the third party shall hold the firm of Provost & Pritchard Engineering Group, Inc. harmless, and shall bear the cost of Provost & Pritchard Engineering Group, Inc.'s legal fees associated with defending and enforcing these rights.

| No. | REVISION | BY | DATE |
|---|---|---|---|
| | BID ISSUE 10-12-2021 | | |

1,2,3–TCP REMOVAL PROJECT FOR CONEJO WELLS
CAMROSA WATER DISTRICT
CAMARILLO, CA

ELECTRICAL
ELECTRICAL LEGEND, ABBREVIATIONS, GENERAL, COMPLIANCE NOTES AND (E) ELECTRICAL SITE - ELECTRICAL DEMOLITION PLAN

EST. 1968 PROVOST & PRITCHARD CONSULTING GROUP
An Employee Owned Company
286 WEST CROMWELL AVENUE
FRESNO, CALIFORNIA 93711–6162
559/449–2700 FAX 559/449–2715
www.ppeng.com

DESIGN ENGINEER: KLP
LICENSE NO: 16269
DRAFTED BY: FR | CHECKED BY: KLP
DATE: 5–03–2021
JOB NO: 21–598
PHASE: –

0 1"
ORIGINAL SCALE SHOWN IS ONE INCH. ADJUST SCALE FOR REDUCED OR ENLARGED PLANS.

PEZZONI ENGINEERING, INC.
CONSULTING ELECTRICAL ENGINEERS
1150 9TH Street Suite #1415 Modesto, CA 95354
PHONE: 209 . 554 . 4602
HTTP://WWW.PEZENGR.COM

PEZZONI ENGINEERING, INC. © Copyrighted 2020

SHEET E0.1



10/12/21 9:13:02 AM F:\21\598 CAMROSA WATER DISTRICT GAC\ENGR\SHEETS\E0.1.DWG frangel

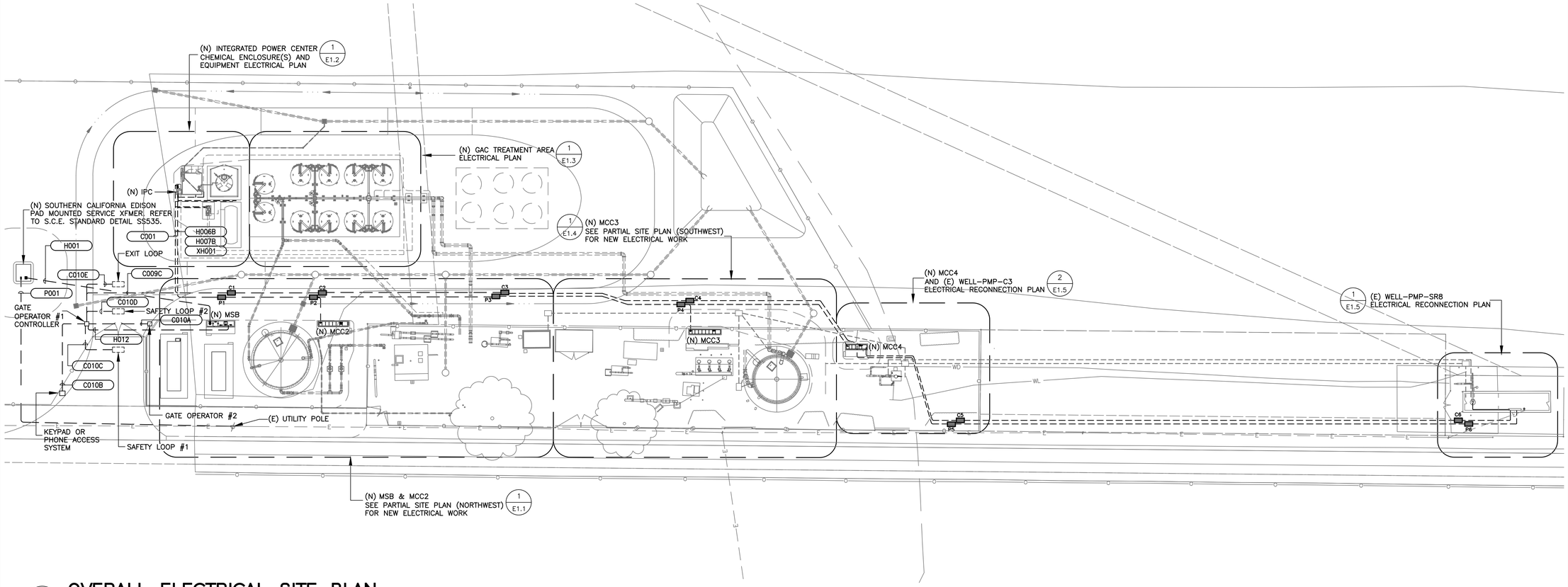


1 OVERALL ELECTRICAL SITE PLAN

SCALE: 1"=30'-0"

811 Know what's below. Call before you dig.

WARNING POWER LINES OVERHEAD

COPYRIGHT 2021 by PROVOST & PRITCHARD ENGINEERING GROUP, INC. ALL RIGHTS RESERVED
The firm of Provost & Pritchard Engineering Group, Inc. expressly reserves its common law copyright and other applicable property rights in these plans. These plans are not to be reproduced, changed, or copied in any form or manner whatsoever, nor are they to be assigned to a third party without first obtaining the written permission and consent of Provost & Pritchard Engineering Group, Inc. In the event of unauthorized reuse of these plans by a third party, the third party shall hold the firm of Provost & Pritchard Engineering Group, Inc. harmless, and shall bear the cost of Provost & Pritchard Engineering Group, Inc.'s legal fees associated with defending and enforcing these rights.

| No. | REVISION | BY | DATE |
|---|---|---|---|
| | BID ISSUE 10-12-2021 | | |

REGISTERED PROFESSIONAL ENGINEER KEVIN L. PEZZONI NO. 16269 ELECTRICAL STATE OF CALIFORNIA

1,2,3-TCP REMOVAL PROJECT FOR CONEJO WELLS
CAMROSA WATER DISTRICT
CAMARILLO, CA

ELECTRICAL

OVERALL ELECTRICAL SITE PLAN

EST. 1968 PROVOST & PRITCHARD CONSULTING GROUP
An Employee Owned Company
286 WEST CROMWELL AVENUE
FRESNO, CALIFORNIA 93711-6162
559/449-2700 FAX 559/449-2715
www.ppeng.com

DESIGN ENGINEER: KLP
LICENSE NO: 16269

| DRAFTED BY: FR | CHECKED BY: KLP |
|---|---|
| DATE: 5-03-2021 | |
| JOB NO: 21-598 | |
| PHASE: – | |

0 1"
ORIGINAL SCALE SHOWN IS ONE INCH. ADJUST SCALE FOR REDUCED OR ENLARGED PLANS.

SHEET E1.0

41 OF 54

SCALE IN FEET
0 15 30 60

PEZZONI ENGINEERING, INC.
CONSULTING ELECTRICAL ENGINEERS
1150 9TH Street Suite #1415 Modesto, CA 95354
PHONE: 209 . 554 . 4602
HTTP://WWW.PEZENGR.COM

PEZZONI ENGINEERING, INC. © Copyrighted 2020

10/12/21 9:13:09 AM F:\21\598 CAMROSA WATER DISTRICT GAC\ENGR\SHEETS\E1.0 .DWG frangel

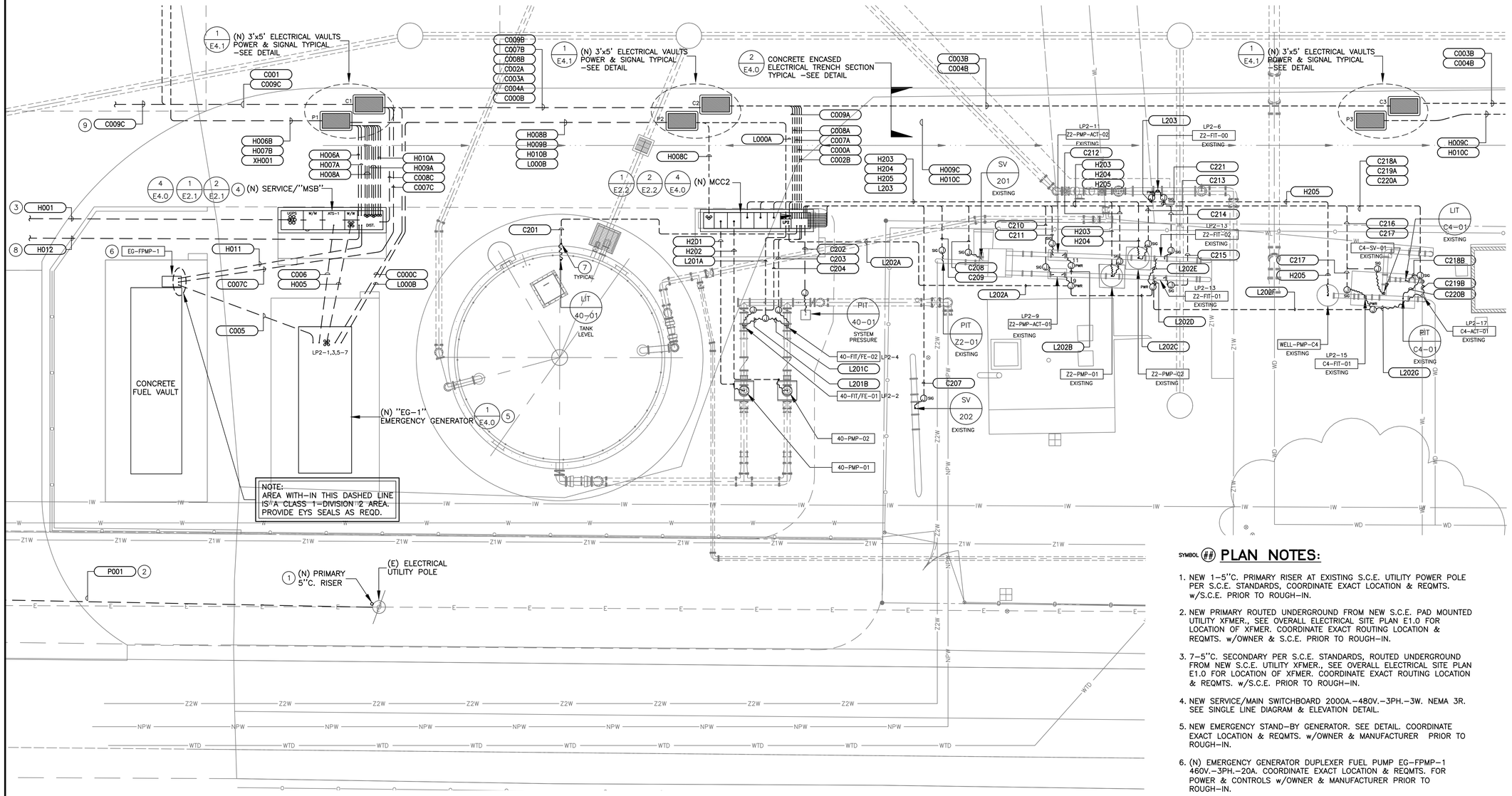


## SYMBOL (##) PLAN NOTES:

1. NEW 1–5"C. PRIMARY RISER AT EXISTING S.C.E. UTILITY POWER POLE PER S.C.E. STANDARDS, COORDINATE EXACT LOCATION & REQMTS. w/S.C.E. PRIOR TO ROUGH–IN.
2. NEW PRIMARY ROUTED UNDERGROUND FROM NEW S.C.E. PAD MOUNTED UTILITY XFMER., SEE OVERALL ELECTRICAL SITE PLAN E1.0 FOR LOCATION OF XFMER. COORDINATE EXACT ROUTING LOCATION & REQMTS. w/OWNER & S.C.E. PRIOR TO ROUGH–IN.
3. 7–5"C. SECONDARY PER S.C.E. STANDARDS, ROUTED UNDERGROUND FROM NEW S.C.E. UTILITY XFMER., SEE OVERALL ELECTRICAL SITE PLAN E1.0 FOR LOCATION OF XFMER. COORDINATE EXACT ROUTING LOCATION & REQMTS. w/S.C.E. PRIOR TO ROUGH–IN.
4. NEW SERVICE/MAIN SWITCHBOARD 2000A.–480V.–3PH.–3W. NEMA 3R. SEE SINGLE LINE DIAGRAM & ELEVATION DETAIL.
5. NEW EMERGENCY STAND–BY GENERATOR. SEE DETAIL. COORDINATE EXACT LOCATION & REQMTS. w/OWNER & MANUFACTURER PRIOR TO ROUGH–IN.
6. (N) EMERGENCY GENERATOR DUPLEXER FUEL PUMP EG–FPMP–1 460V.–3PH.–20A. COORDINATE EXACT LOCATION & REQMTS. FOR POWER & CONTROLS w/OWNER & MANUFACTURER PRIOR TO ROUGH–IN.
7. CRMC RISER(S) AND LFMC TO INSTRUMENT/DEVICE.
8. 1"C. TO MOTORIZED GATE CONTROLLER. SEE OVERALL ELECTRICAL SITE PLAN E1.0. FOR LOCATION.
9. 1"C. TO MOTORIZED GATE CONTROLLER. SEE OVERALL ELECTRICAL SITE PLAN E1.0. FOR LOCATION.

## 1 PARTIAL SITE PLAN (NORTHWEST CORNER)– AREAS NEW ELECTRICAL WORK

SCALE: 1/8"=1'–0"

SCALE IN FEET
0 6 8 16

Know what's below. Call before you dig.

WARNING POWER LINES OVERHEAD

COPYRIGHT 2021 by PROVOST & PRITCHARD ENGINEERING GROUP, INC. ALL RIGHTS RESERVED
The firm of Provost & Pritchard Engineering Group, Inc. owns the copyright to these plans, specifications and other applicable property rights in these plans. These plans are not to be reproduced, changed, or copied in any form or manner whatsoever, nor are they to be assigned to a third party without first obtaining the express written authorization and consent of Provost & Pritchard Engineering Group, Inc. In the event of unauthorized reuse of these plans by a third party, the third party shall indemnify, defend & hold Provost & Pritchard Engineering Group, Inc. harmless, and shall bear the cost of Provost & Pritchard Engineering Group, Inc.'s attorney's fees associated with defending and enforcing these rights.

| No. | REVISION | BY | DATE |
|---|---|---|---|
| | BID ISSUE 10-12-2021 | | |

REGISTERED PROFESSIONAL ENGINEER KEVIN L. PRICE NO. 16269 ELECTRICAL STATE OF CALIFORNIA

1,2,3–TCP REMOVAL PROJECT FOR CONEJO WELLS
CAMROSA WATER DISTRICT
CAMARILLO, CA

ELECTRICAL
PARTIAL SITE PLAN (NORTHWEST CORNER)
AREAS NEW ELECTRICAL WORK

EST 1968 PROVOST& PRITCHARD CONSULTING GROUP
An Employee Owned Company
286 W.CROMWELL AVENUE
FRESNO, CALIFORNIA 93711-6162
559/449-2700 FAX 559/449-2715
www.ppeng.com

DESIGN ENGINEER: KLP
LICENSE NO: 16269
DRAFTED BY: FR
CHECKED BY: KLP
DATE: 5-03-2021
JOB NO: 21-598
PHASE: –
0 1"
ORIGINAL SCALE SHOWN IS ONE INCH. ADJUST SCALE FOR REDUCED OR ENLARGED PLANS.
SHEET E1.1
42 OF 54

PEZZONI ENGINEERING, INC.
CONSULTING ELECTRICAL ENGINEERS
1150 9TH Street Suite #1415 Modesto, CA 95354
PHONE: 209 . 554 . 4622
HTTP://WWW.PEZENGR.COM

PEZZONI ENGINEERING, INC. © Copyrighted 2020

10/12/21 9:13:11 AM F:\21\598 CAMROSA WATER DISTRICT GAC\ENGR\SHEETS\E1 1.DWG frangel

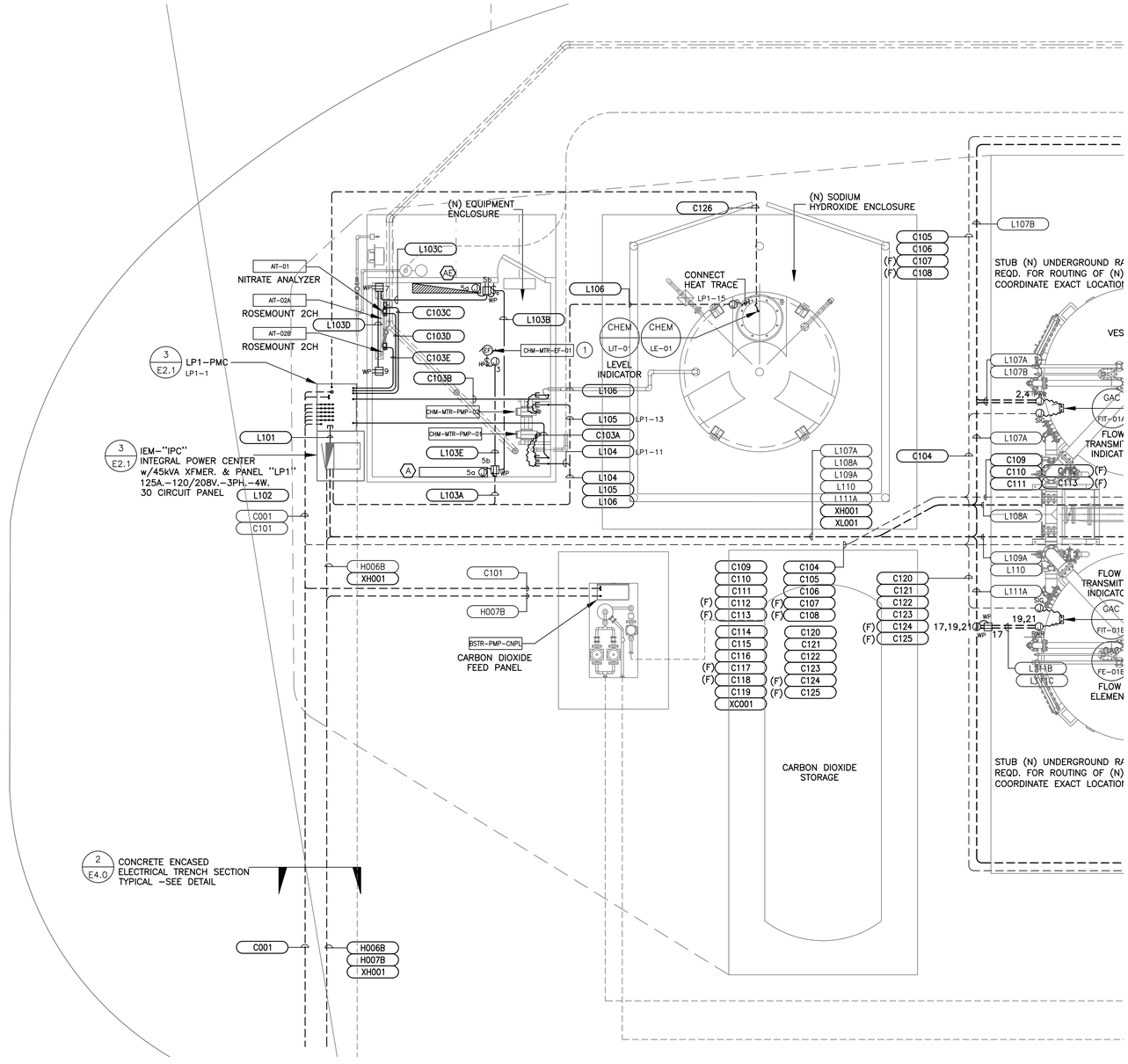


# NEW INTEGRATED POWER CENTER AND CHEMICAL AREA EQUIPMENT & ENCLOSURE(S) ELECTRICAL PLAN

1 SCALE: 1/4"=1'-0"

SCALE IN FEET
0 2 4 8

## (##) PLAN NOTES:

SYMBOL

1. EXHAUST FAN 120V.-1PH.-1/8HP. PROVIDE MOTOR RATED SWITCH & CIRCUIT AS SHOWN. ALSO PROVIDE WALL SWITCH CONTROL AS MAY BE REQD. COORDINATE EXACT LOCATION & REQMTS. FOR POWER & CONTROLS w/OWNER PRIOR TO ROUGH-IN.

Know what's below. Call before you dig.

WARNING POWER LINES OVERHEAD

COPYRIGHT 2021 by PROVOST & PRITCHARD ENGINEERING GROUP, INC. ALL RIGHTS RESERVED
The firm of Provost & Pritchard Engineering Group, Inc. expressly reserves its common law copyright and other applicable property rights in these plans. These plans are not to be reproduced, changed, or copied in any form or manner whatsoever, nor are they to be assigned to a third party without first obtaining the express written permission of Provost & Pritchard Engineering Group, Inc. In the event of unauthorized reuse of these plans by a third party, the third party shall indemnify, defend & hold Provost & Pritchard Engineering Group, Inc. harmless, and shall bear the cost of Provost & Pritchard Engineering Group, Inc.'s attorney's fees associated with defending and enforcing these rights.

| No. | REVISION | BY | DATE |
|---|---|---|---|
| | BID ISSUE 10-12-2021 | | |

REGISTERED PROFESSIONAL ENGINEER KEVIN L. PEZZONI NO. 16269 ELECTRICAL STATE OF CALIFORNIA

1,2,3- TCP REMOVAL PROJECT FOR CONEJO WELLS
CAMROSA WATER DISTRICT
CAMARILLO, CA

ELECTRICAL
NEW INTEGRATED POWER CENTER
CHEMICAL AREA EQUIPMENT & ENCLOSURE(S)
ELECTRICAL PLAN

EST 1968 PROVOST& PRITCHARD CONSULTING GROUP
An Employee Owned Company
286 W. CROMWELL AVENUE
FRESNO, CALIFORNIA 93711-6162
559/449-2700 FAX 559/449-2715
www.ppeng.com

DESIGN ENGINEER: KLP
LICENSE NO: 16269
DRAFTED BY: FR
CHECKED BY: KLP
DATE: 5-03-2021
JOB NO: 21-598
PHASE: -
0 1"
ORIGINAL SCALE SHOWN IS ONE INCH. ADJUST SCALE FOR REDUCED OR ENLARGED PLANS.
SHEET E1.2
43 OF 54

PEZZONI ENGINEERING, INC.
CONSULTING ELECTRICAL ENGINEERS
1150 9TH Street Suite #1415 Modesto, CA 95354
PHONE: 209 . 554 . 4602
HTTP://WWW.PEZENGR.COM

PEZZONI ENGINEERING, INC. © Copyrighted 2020

10/12/21 9:13:15 AM F:\21\598 CAMROSA WATER DISTRICT GAC\ENGR\SHEETS\E1.2.DWG frangel

811 Know what's below. Call before you dig.

WARNING POWER LINES OVERHEAD

COPYRIGHT 2021 by PROVOST & PRITCHARD ENGINEERING GROUP, INC. ALL RIGHTS RESERVED
The firm of Provost & Pritchard Engineering Group, Inc. expressly reserves its common law copyright and other applicable property rights in these plans. These plans are not to be reproduced, changed, or copied in any form or manner whatsoever nor are they to be assigned to a third party without first obtaining the express written permission and consent of Pritchard Engineering Group, Inc. In the event of unauthorized reuse of these plans by a third party, the third party shall indemnify, hold harmless, and defend Pritchard Engineering Group, Inc. harmless, and shall bear the cost of Provost & Pritchard Engineering Group, Inc.'s attorney's fees associated with defending and enforcing these rights.

BID ISSUE
10-12-2021

| No. | REVISION | BY | DATE |
|---|---|---|---|

REGISTERED PROFESSIONAL ENGINEER
KEVIN L. PEZZONI
NO. 16269
ELECTRICAL
STATE OF CALIFORNIA

1,2,3-TCP REMOVAL PROJECT FOR
CONEJO WELLS
CAMROSA WATER DISTRICT
CAMARILLO, CA

ELECTRICAL
(N) GAC TREATMENT AREA
ELECTRICAL PLAN

PROVOST & PRITCHARD
EST 1968
CONSULTING GROUP
An Employee Owned Company
286 W. CROMWELL AVENUE
FRESNO, CALIFORNIA 93711-6162
559/449-2700 FAX 559/449-2715
www.ppeng.com

DESIGN ENGINEER: KLP
LICENSE NO: 16269

| DRAFTED BY: | CHECKED BY: |
|---|---|
| FR | KLP |

DATE: 5-03-2021
JOB NO: 21-598

PHASE: –

0 1"
ORIGINAL SCALE SHOWN IS ONE INCH. ADJUST SCALE FOR REDUCED OR ENLARGED PLANS.

SHEET E1.3

44 OF 54

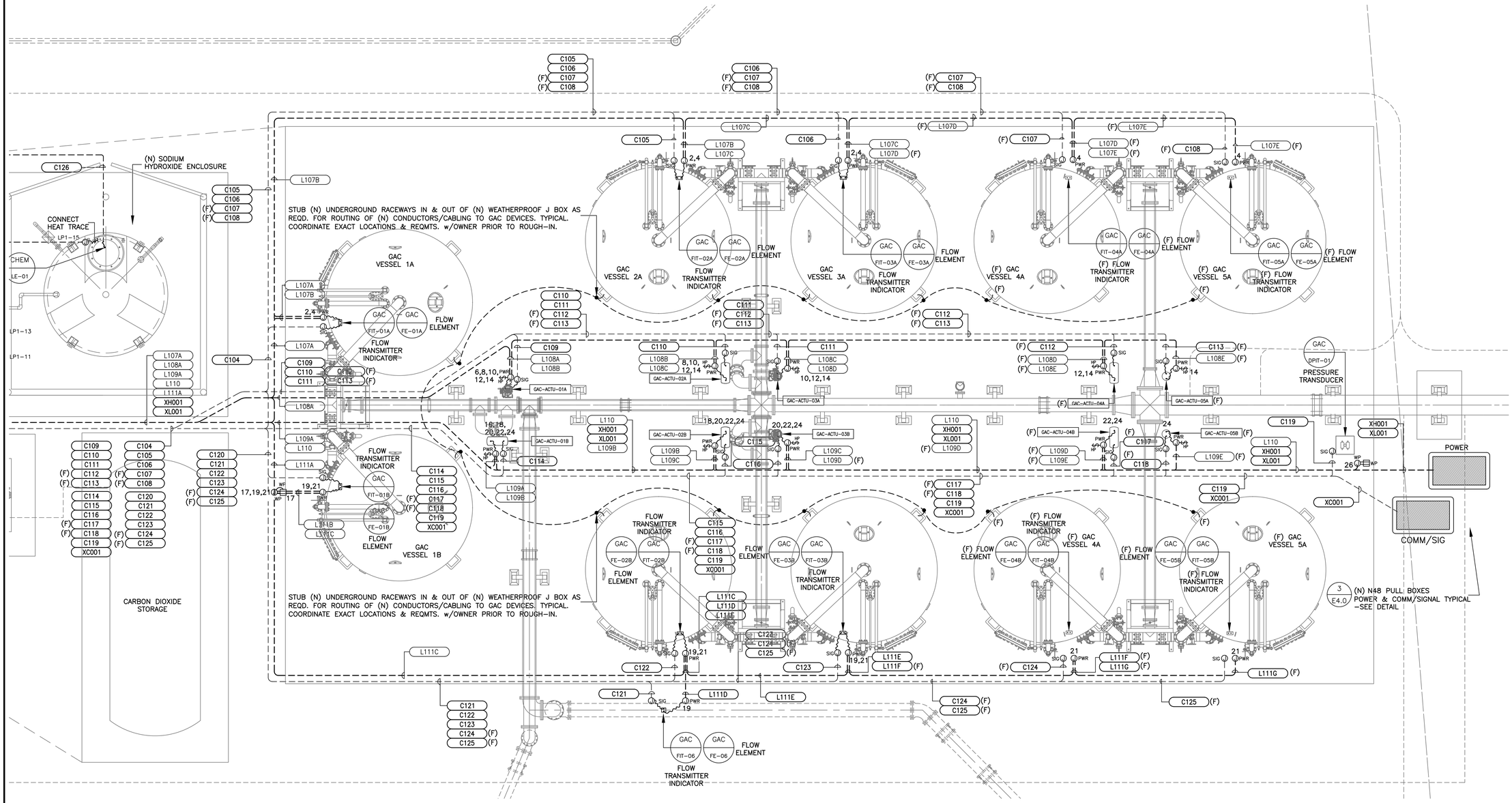


1 (N) GAC TREATMENT AREA ELECTRICAL PLAN
SCALE: 1/4"=1'-0"

SCALE IN FEET
0 2 4 8

PEZZONI ENGINEERING, INC.
CONSULTING ELECTRICAL ENGINEERS
1150 9TH Street Suite #1415 Modesto, CA 95354
PHONE: 209 . 554 . 4602
HTTP://WWW.PEZENGR.COM

PEZZONI ENGINEERING, INC. © Copyrighted 2020

10/12/21 9:13:21 AM F:\21\598 CAMROSA WATER DISTRICT GAC\ENGR\SHEETS\E1.3.DWG frangel

COPYRIGHT 2021 PROVOST & PRITCHARD ENGINEERING GROUP, INC. ALL RIGHTS RESERVED
The firm of Provost & Pritchard Engineering Group, Inc. expressly reserves its common law copyright and other applicable property rights in these plans. These plans are not to be reproduced, changed, or copied in any form or manner whatsoever nor are they to be assigned to a third party without first obtaining the express written permission and consent of Provost & Pritchard Engineering Group, Inc. In the event of unauthorized reuse of these plans by a third party, the third party shall indemnify, hold harmless, and defend Provost & Pritchard Engineering Group, Inc. and its officers, employees, and agents from and against any and all loss, cost and liability associated with defending and enforcing these rights.

Know what's below. Call before you dig.

WARNING POWER LINES OVERHEAD

BID ISSUE
10-12-2021

| No. | REVISION | BY | DATE |
|---|---|---|---|

REGISTERED PROFESSIONAL ENGINEER — KEVIN L. PRICE — NO. 16269 — ELECTRICAL — STATE OF CALIFORNIA

1,2,3-TCP REMOVAL PROJECT FOR
CONEJO WELLS
CAMROSA WATER DISTRICT
CAMARILLO, CA

ELECTRICAL
PARTIAL SITE PLAN (SOUTHWEST CORNER)
AREAS NEW ELECTRICAL WORK

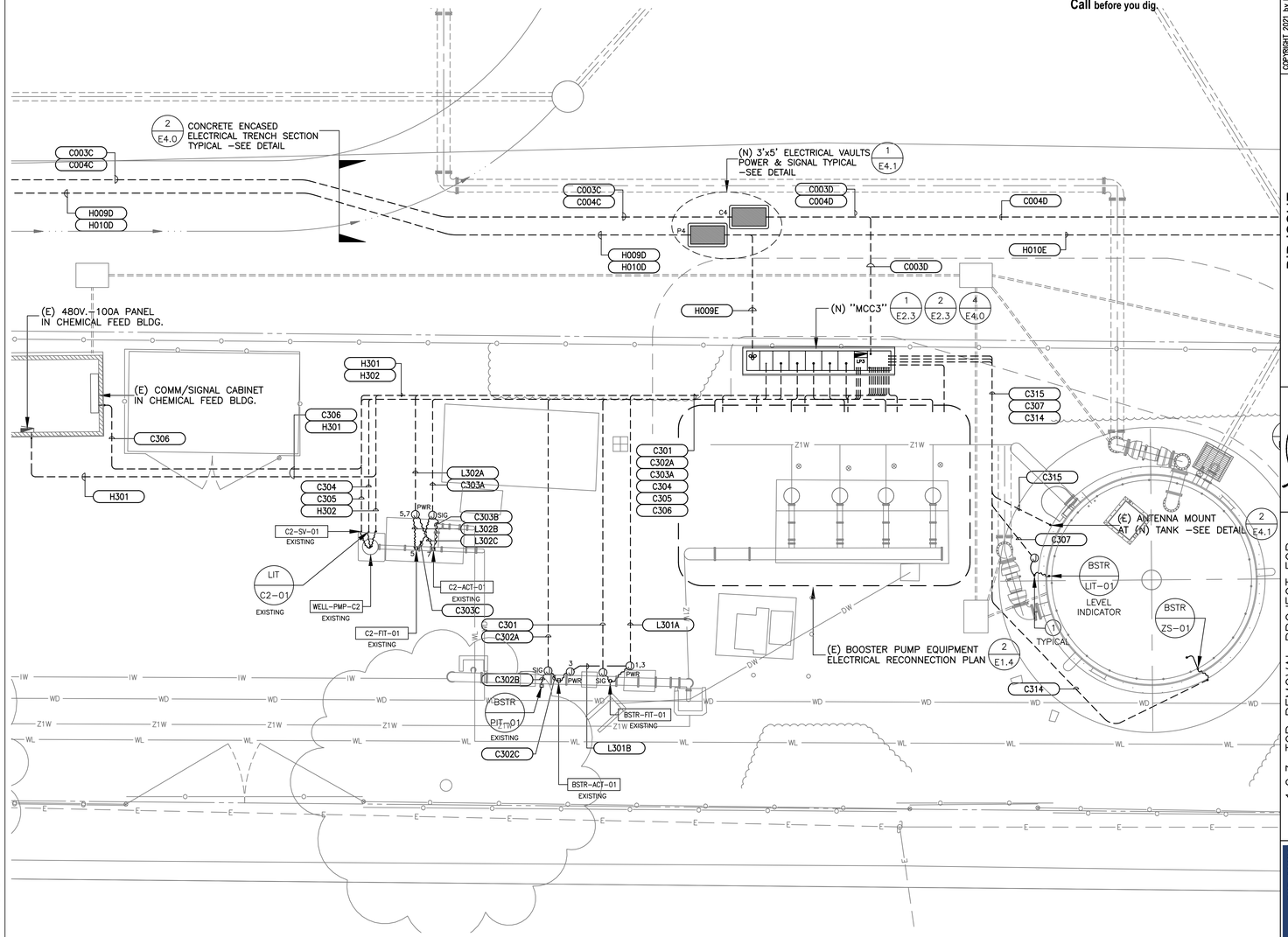


## 1 PARTIAL SITE PLAN (SOUTHWEST CORNER)– AREAS NEW ELECTRICAL WORK

SCALE: 1/8"=1'–0"

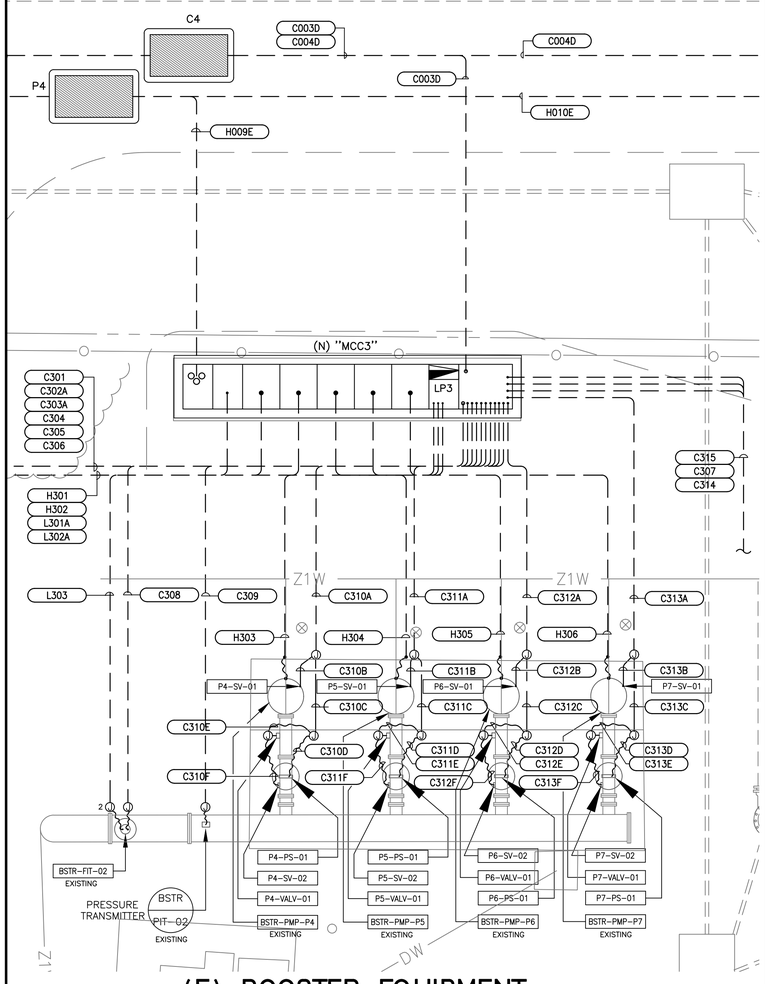


## 2 (E) BOOSTER EQUIPMENT ELECTRICAL RECONNECTION PLAN

SCALE: 1/4"=1'–0"

SYMBOL (##) **PLAN NOTES:**

1. CRMC RISER(S) AND LFMC TO INSTRUMENT/DEVICE.

SCALE IN FEET
0 4 8 16

PROVOST& PRITCHARD CONSULTING GROUP
EST 1968
An Employee Owned Company
286 W. CROMWELL AVENUE
FRESNO, CALIFORNIA 93711-6162
559/449-2700 FAX 559/449-2715
www.ppeng.com

DESIGN ENGINEER: KLP
LICENSE NO: 16269
DRAFTED BY: FR
CHECKED BY: KLP
DATE: 5-03-2021
JOB NO: 21-598
PHASE: –
0 1"
ORIGINAL SCALE SHOWN IS ONE INCH. ADJUST SCALE FOR REDUCED OR ENLARGED PLANS.
SHEET E1.4
45 OF 54

PEZZONI ENGINEERING, INC.
CONSULTING ELECTRICAL ENGINEERS
1150 9TH Street Suite #1415 Modesto, CA 95354
PHONE: 209 . 554 . 4602
HTTP://WWW.PEZENGR.COM

PEZZONI ENGINEERING, INC. © Copyrighted 2020

10/12/21 9:13:28 AM F:\21\598 CAMROSA WATER DISTRICT GAC\ENGR\SHEETS\E1.4.DWG frangel

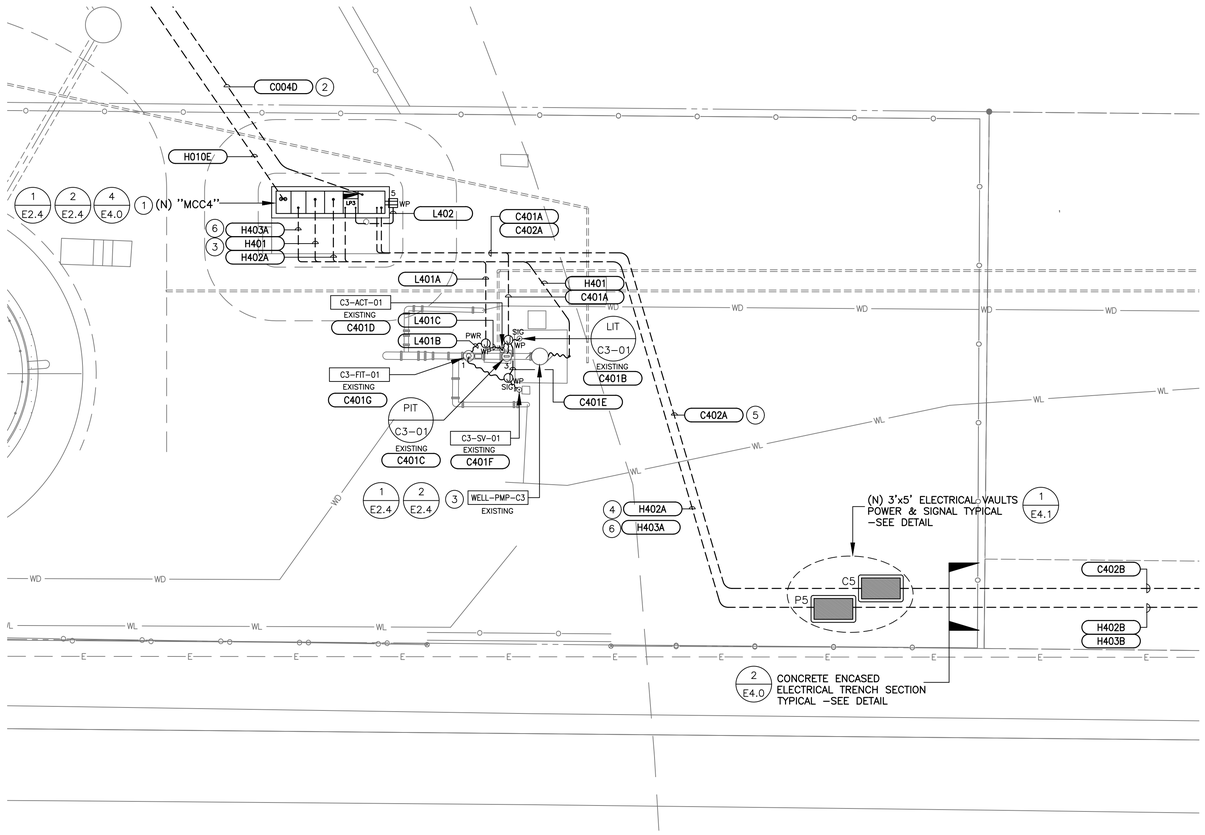


## (##) SYMBOL WELL-PMP-C3 PLAN NOTES:

1. (N) MOTOR CONTROL CENTER "MCC4" 600A.-480V.-3PH.-3W. FED FROM (N) "MSB" DIST. SWITCHBOARD. SEE SINGLE LINE DIAGRAM 1/E2.1 & OVERALL ELECTRICAL SITE PLAN E1.0 FOR ROUTING OF (N) 2-4"C. UNDERGROUND FEEDER. COORDINATE EXACT LOCATION OF (N) MCC & ROUTING OF (N) FEEDER w/OWNER PRIOR TO ROUGH-IN.
2. (N) "PCM" AT "MCC4" w/(N) 2"C. ROUTED UNDERGROUND FROM (N) 3'x5' COMM./SIGNAL VAULT FOR SIGNAL/CONTROL CABLING. SEE OVERALL ELECTRICAL SITE PLAN E1.0 FOR ROUTING OF (N) UNDERGROUND RACEWAY, COORDINATE EXACT ROUTING w/OWNER PRIOR TO ROUGH-IN.
3. (E) WELL-PMP-C3 480V.-3PH.-100HP PROVIDE (N) 2 1/2"C. FEEDER FROM (N) "MCC4". ROUTED VIA UNDERGROUND TO RISER AT (E) CONCRETE BASE & FLEX CONNECTION TO (E) WELL-PMP-C3. COORDINATE EXACT REQMTS w/OWNER & IN FIELD PRIOR TO ROUGH-IN.
4. PROVIDE (N) 480V. FEEDER FROM (N) "MCC4" TO (E) WELL-PMP-SR8. ROUTE (N) 2 1/2"C. VIA UNDERGROUND & (N) 3'x5' ELECTRICAL VAULT(S) TO RISER UP AT EXTERIOR OF (E) BUILDING & STUB INTO BACK OF (N) 400A/3P DISCONNECT SWITCH. COORDINATE EXACT HEIGHT, LOCATION & ROUTING OF (N) FEEDER w/OWNER & IN FILED PRIOR TO ROUGH-IN.
5. PROVIDE (N) 2"C. FROM "PCM" AT "MCC4". ROUTED VIA UNDERGROUND & (N) 3'x5' COMM/SIGNAL VAULT(S) TO RISER UP AT EXTERIOR OF (E) BLDG. & STUB INTO BACK OF (E) SIGNAL/CONTROL CABINET, PROVIDE (N) SIGNAL CABLING FROM (N) "PCM" AT (N) "MCC4" TO CONNECT ALL (E) LV DEVICES THRU (E) CABINET & RACEWAYS. COORDINATE EXACT REQMTS. IN FIELD.
6. PROVIDE (N) 480V. SINGLE PHASE FEEDER FROM (N) "MCC4" TO (E) PANEL SR8, ROUTE (N) 2"C. VIA UNDERGROUND & (N) 3'x5' ELECTRICAL VAULT(S) TO RISER UP AT EXTERIOR OF (E) BUILDING & STUB INTO BACK OF (E) 30A/2P DISCONNECT SWITCH TO CONNECT (E) PANEL TO (N) "MCC4". COORDINATE EXACT HEIGHT, LOCATION & ROUTING OF (N) FEEDER w/OWNER & IN FILED PRIOR TO ROUGH-IN.

## 2 NEW MCC4 & (E) WELL-PMP-C3 ELECTRICAL RECONNECTION PLAN

SCALE: 1/8"=1'-0"

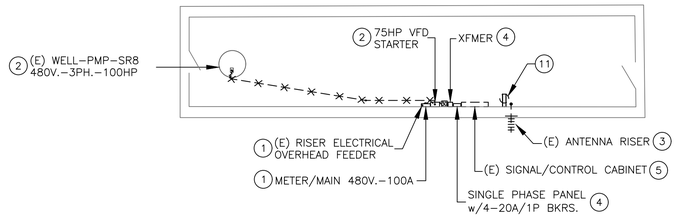


## ELECTRICAL DEMOLITION PLAN

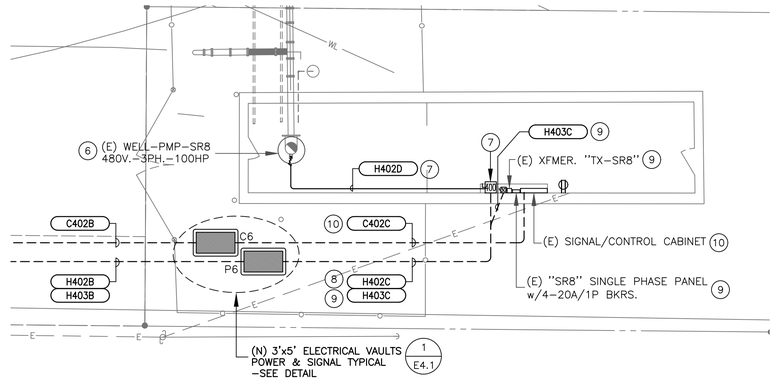


## ELECTRICAL RECONNECTION PLAN

## (##) SYMBOL WELL-PMP-SR8 PLAN NOTES:

1. DISCONNECT & REMOVE (E) 100A METER/MAIN AND OVERHEAD ELECTRICAL. COORDINATE DISCONNECTION & REMOVAL OF (E) ELECTRICAL EQUIPMENT w/OWNER & UTILITY COMPANY. SEE ELECTRICAL RECONNECTION PLAN.
2. (N) 480V.-100HP WELL-PMP-SR8, DISCONNECT & REMOVE (E) VFD MOTOR STARTER, FEEDER (RACEWAYS & CONDUCTORS). COORDINATE EXACT REQMTS. w/OWNER & IN FIELD PRIOR DISCONNECTION. SEE ELECTRICAL RECONNECTION PLAN.
3. DISCONNECT & REMOVE (E) ANTENNA, ANTENNA RISER & CABLING. COORDINATE EXACT REQMTS w/OWNER PRIOR TO REMOVAL.
4. REMOVE & RELOCATE (E) XFMER & SINGLE PHASE PANEL w/(4) 20A/1P BREAKERS TO MINIMUM OF +12" ABOVE (N) FINISHED FLOOR. COORDINATE EXATC MOUNTING HEIGHT & LOCATION w/OWNER PRIOR TO ROUGH-IN. SEE ELECTRICAL RECONNECTION PLAN.
5. REMOVE & RELOCATE (E) SIGNAL/CONTROL CABINET TO MINIMUM +12" ABOVE (N) FINISHED FLOOR. REMOVE ALL LOW VOLTAGE CONTROL/SIGNAL CABLING TO EQUIPMENT, EXTEND (E) RACEWAYS AS REQD. COORDINATE EXACT MOUNTING HEIGHT & LOCATION w/PWNER PRIOR TO ROUGH-IN. SEE ELECTRICAL RECONNECTION PLAN.
6. (E) WELL-PMP-SR8, 480V.-3PH.-100HP RECONNECT TO (N) "MCC4". SEE SINGLE LINE DIAGRAM & ELEVATION DETAIL.
7. PROVIDE (N) 400A/3P DISCONNECT SWITCH & (N) FEEDER FROM "MCC4", LOCATE (N) DISCONNECT SWITCH AT REMOVED VFD. & MINIMUM 12" ABOVE (N) FINISHED FLOOR. COORDINATE ROUTING OF (N) FEEDER TO (E) WELL-PMP-SR8 w/OWNER PRIOR TO ROUGH-IN.
8. ROUTE (N) 2 1/2"C. FEEDER VIA UNDERGROUND & (N) 3'x5' ELECTRICAL VAULT FROM "MCC4" TO RISER UP AT EXTERIOR OF (E) BLDG. & STUB INTO BACK OF (N) 400A/3P DISCONNECT SWITCH. COORDINATE EXACT LOCATION, MOUNTING HEIGHT & REQMTS. w/OWNER PRIOR TO ROUGH-IN.
9. RELOCATED (E) XFMER TO MINIMUM +12" ABOVE (N) FINISHED FLOOR. PROVIDE (N) PRIMARY 30A.- 480V. FEEDER FROM "MCC4" TO DISCONNECT SWITCH TO RE-FEED (E) SINGLE PHASE PANEL. COORDINATE EXACT REQMTS. IN FIELD.
10. RELOCATED (E) SIGNAL/CONTROL CABINET TO MINIMUM +12" ABOVE (N) FINISHED FLOOR. PROVIDE (N) 2"C. FROM "PMC" AT "MCC4". ROUTED VIA UNDERGROUND & (N) 3'x5' COMM/SIGNAL VAULT TO RISER UP AT EXTERIOR OF (E) BLDG. & STUB INTO BACK OF (E) SIGNAL/CONTROL CABINET, PROVIDE (N) SIGNAL CABLING FROM (N) "PMC" TO CONNECT ALL (E) LV DEVICES THRU (E) CABINET & RACEWAYS. COORDINATE EXACT REQMTS. IN FIELD.
11. REMOVE & RELOCATE (E) DUPLEX RECEPTACLE TO MINIMUM +18" ABOVE (N) FINISHED FLOOR. COORDINATE EXACT MOUNTING HEIGHT & REQMTS. w/OWNER PRIOR TO ROUGH-IN.

## 1 (E) WELL-PMP-SR8 - ELECTRICAL PLAN

SCALE: 1/8"=1'-0"

SCALE IN FEET

0 4 8 16

PEZZONI ENGINEERING, INC.
CONSULTING ELECTRICAL ENGINEERS
1150 9TH Street Suite #1415 Modesto, CA 95354
PHONE: 209 . 554 . 4602
HTTP://WWW.PEZENGR.COM

PEZZONI ENGINEERING, INC. © Copyrighted 2020

811 Know what's below. Call before you dig.

WARNING
POWER LINES OVERHEAD

COPYRIGHT 2021 by PROVOST & PRITCHARD ENGINEERING GROUP, INC. ALL RIGHTS RESERVED.
The firm of Provost & Pritchard Engineering Group, Inc. expressly reserves its common law copyright and other applicable property rights in these plans. These plans are not to be reproduced, changed, or copied in any form or manner whatsoever, nor are they to be assigned to a third party without first obtaining the written permission and consent of Provost & Pritchard Engineering Group, Inc. In the event of unauthorized reuse of these plans by a third party, the third party and not Provost & Pritchard Engineering Group, Inc. shall be liable for all losses, damages, and fees associated with defending and enforcing these rights.

BID ISSUE
10-12-2021

| No. | REVISION | BY | DATE |
|---|---|---|---|

1,2,3-TCP REMOVAL PROJECT FOR
CONEJO WELLS
CAMROSA WATER DISTRICT
CAMARILLO, CA

ELECTRICAL
NEW WATER TREATMENT STORAGE TANK
& (E) BOSTER PUMP(S) RECONNECTION ELECTRICAL PLAN

EST 1968
PROVOST& PRITCHARD CONSULTING GROUP
An Employee Owned Company
286 WEST CROMWELL AVENUE
FRESNO, CALIFORNIA 93711-6162
559/449-2700 FAX 559/449-2715
www.ppeng.com

DESIGN ENGINEER: KLP
LICENSE NO: 16269

| DRAFTED BY: | CHECKED BY: |
|---|---|
| FR | KLP |

DATE: 5-03-2021
JOB NO: 21-598

PHASE: -

0 1"
ORIGINAL SCALE SHOWN IS ONE INCH. ADJUST SCALE FOR REDUCED OR ENLARGED PLANS.

SHEET E1.5

46 OF 54

10/12/21 9:13:32 AM F:\21\598 CAMROSA WATER DISTRICT GAC\ENGR\SHEETS\E1.5.DWG frangel

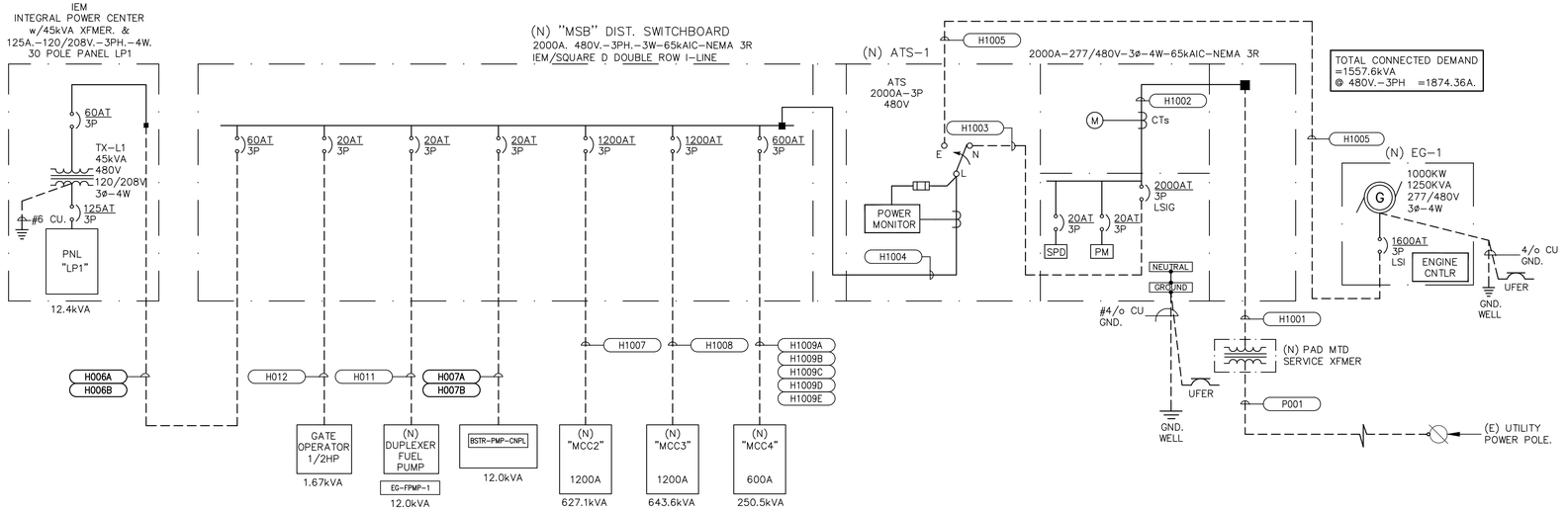


1 SINGLE LINE DIAGRAM – NEW SERVICE/MAIN SWITCHBOARD ''MSB'' AND NEW IEM INTEGRAL POWER CENTER

SCALE: NONE

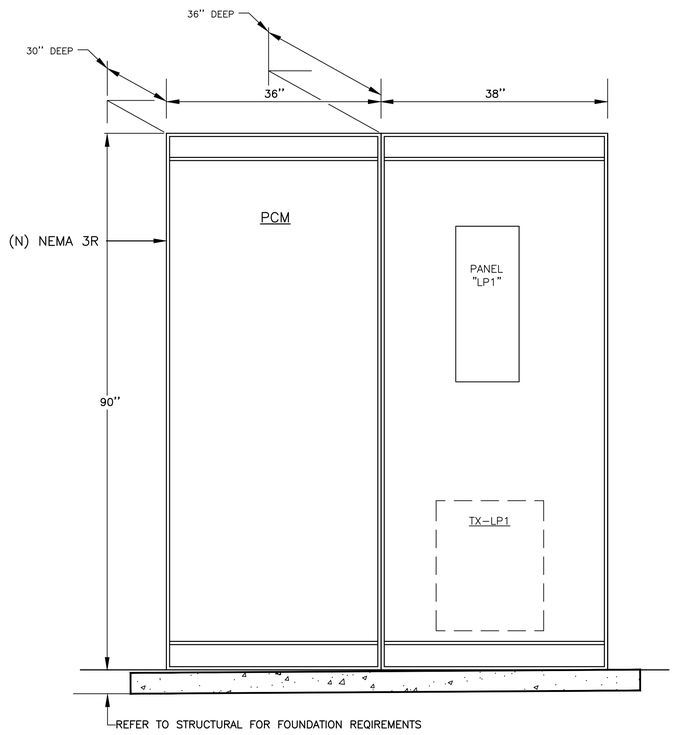


3 (N) ''IEM'' INTEGRAL POWER CENTER

SCALE: NONE

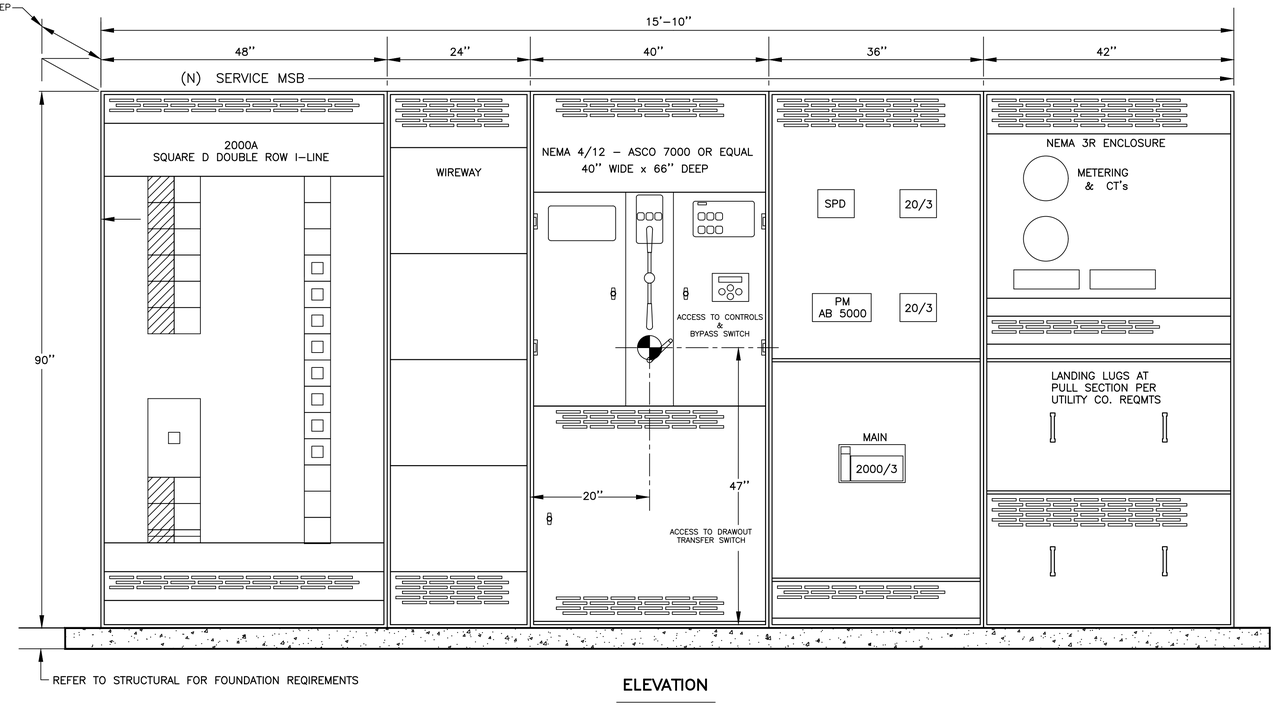


2 NEW MAIN SWITCHBOARD ''MSB'' – ELEVATION DETAIL

SCALE: NONE

811 Know what's below. Call before you dig.

WARNING POWER LINES OVERHEAD

COPYRIGHT 2011 by PROVOST & PRITCHARD
ENGINEERING GROUP, INC. ALL RIGHTS RESERVED
The firm of Provost & Pritchard Engineering Group, Inc. expressly reserves its common law copyright and other applicable property rights in these plans. These plans are not to be reproduced, changed, or copied in any form or manner whatsoever, nor are they to be assigned to a third party without first obtaining the express written permission and consent of Provost & Pritchard Engineering Group, Inc. In the event of unauthorized reuse of these plans by a third party, the third party shall indemnify, hold harmless, and defend Provost & Pritchard Engineering Group, Inc. and its officers, employees, and agents from any and all claims, losses, liability, and costs of Provost & Pritchard Engineering Group, Inc. in connection with defending and enforcing these rights.

| No. | REVISION | BY | DATE |
|---|---|---|---|
| | BID ISSUE 10-12-2021 | | |

REGISTERED PROFESSIONAL ENGINEER KEVIN L. PEZZONI NO. 16269 ELECTRICAL STATE OF CALIFORNIA

1,2,3-TCP REMOVAL PROJECT FOR
CONEJO WELLS
CAMROSA WATER DISTRICT
CAMARILLO, CA

ELECTRICAL

NEW SERVICE - MAIN SWITCHBOARD "MSB"
SINGLE LINE DIAGRAM & ELEVATION DETAIL

PROVOST & PRITCHARD CONSULTING GROUP
EST 1968
An Employee Owned Company
286 W.CROMWELL AVENUE
FRESNO, CALIFORNIA 93711-6162
559/449-2700 FAX 559/449-2715
www.ppeng.com

DESIGN ENGINEER: KLP
LICENSE NO: 16269

| DRAFTED BY: | CHECKED BY: |
|---|---|
| FR | KLP |

DATE: 5-03-2021
JOB NO: 21-598
PHASE: –

0 1"
ORIGINAL SCALE SHOWN IS ONE INCH. ADJUST SCALE FOR REDUCED OR ENLARGED PLANS.

SHEET E2.1
47 OF 54

PEZZONI ENGINEERING, INC.
CONSULTING ELECTRICAL ENGINEERS
1150 9TH Street Suite #1415 Modesto, CA 95354
PHONE: 209 . 554 . 4602
HTTP://WWW.PEZENGR.COM

PEZZONI ENGINEERING, INC. © Copyrighted 2020

10/12/21 9:13:36 AM F:\21\598 CAMROSA WATER DISTRICT GAC\ENGR\SHEETS\E2.1 SLD.DWG frangel

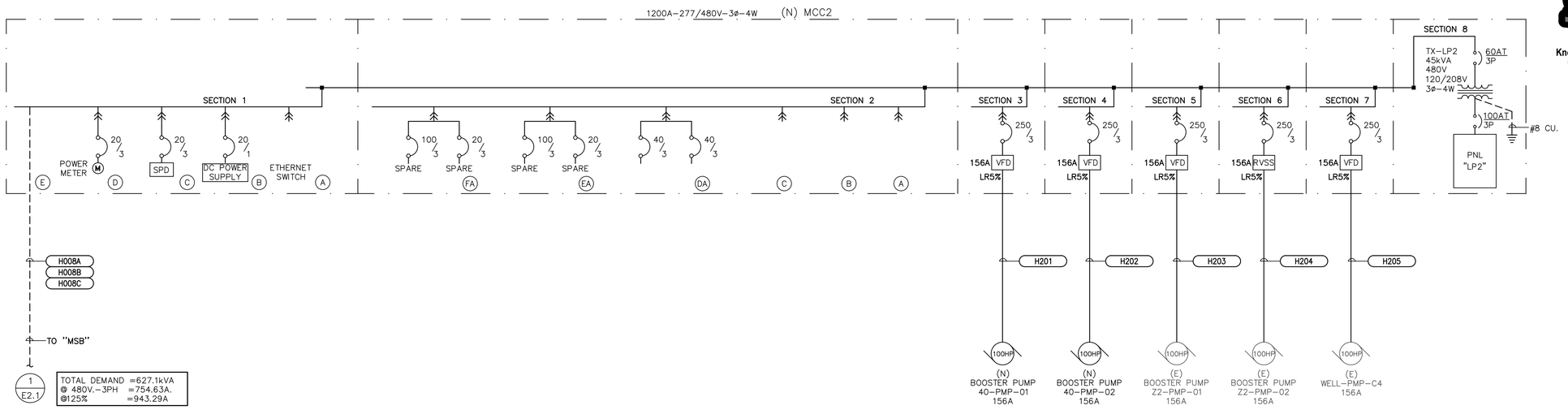


1 SINGLE LINE DIAGRAM – (N) MOTOR CONTROL CENTER ''MCC2''
SCALE: NONE

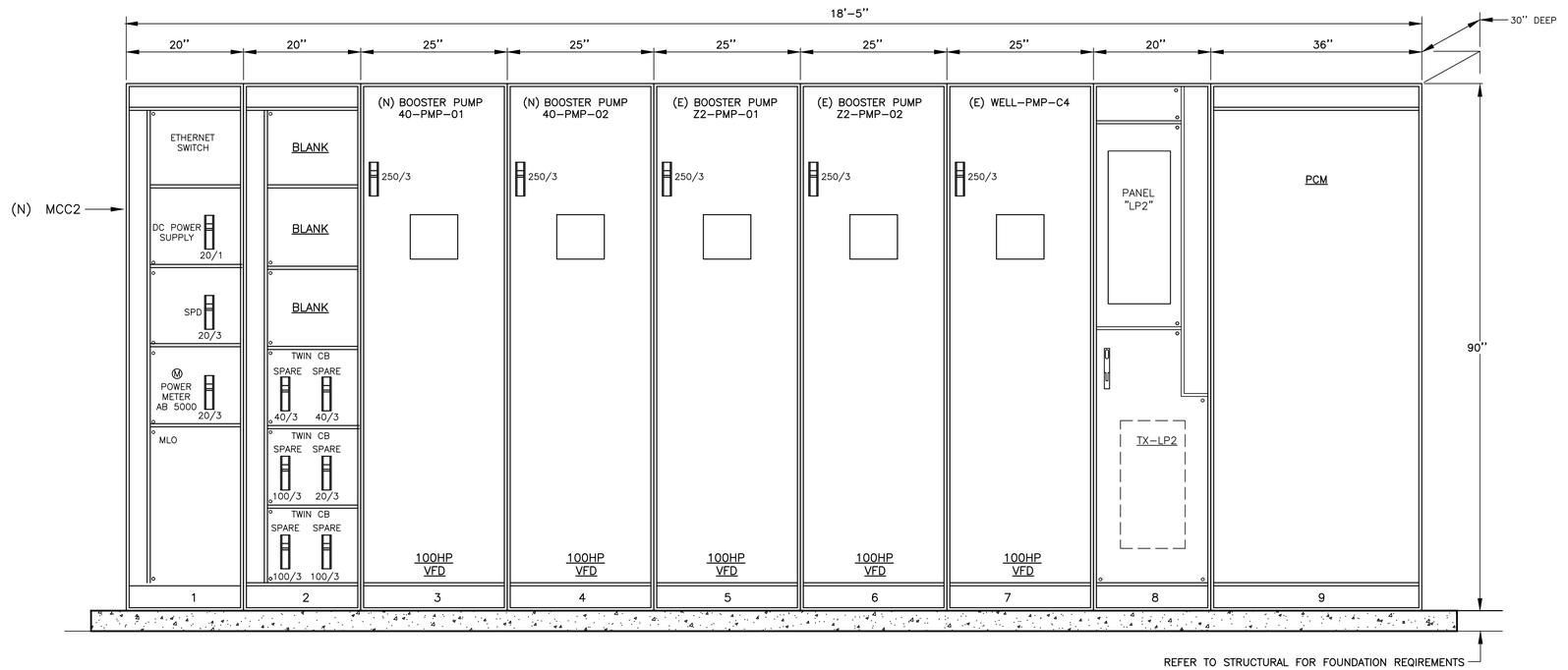


2 (N) MOTOR CONTROL CENTER –''MCC2'' ELEVATION DETAIL
SCALE: NONE

811 Know what's below. Call before you dig.

WARNING POWER LINES OVERHEAD

COPYRIGHT 2021 by PROVOST & PRITCHARD
ENGINEERING GROUP, INC. ALL RIGHTS RESERVED
The firm of Provost & Pritchard Engineering Group, Inc. has expended considerable work on the preparation of these plans and other applicable property rights in these plans. These plans are not to be reproduced, changed, or copied in any form or manner whatsoever nor are they to be assigned to a third party without first obtaining the expressed written permission and consent of Provost & Pritchard Engineering Group, Inc. In the event of unauthorized reuse of these plans by a third party, the third party agrees to hold harmless, indemnify, and defend Provost & Pritchard Engineering Group, Inc. from any claim or liability arising from any reuse of these plans by a third party or by any party in connection with the preparation of those plans.

BID ISSUE
10-12-2021

| No. | REVISION | BY | DATE |
|---|---|---|---|

REGISTERED PROFESSIONAL ENGINEER
KEVIN L. PEZZONI
NO. 16269
ELECTRICAL
STATE OF CALIFORNIA

1,2,3–TCP REMOVAL PROJECT FOR
CONEJO WELLS
CAMROSA WATER DISTRICT
CAMARILLO, CA

ELECTRICAL
MOTOR CONTROL CENTER - "MCC2"
SINGLE LINE DIAGRAM & ELEVATION DETAIL

PROVOST & PRITCHARD CONSULTING GROUP
EST 1968
An Employee Owned Company
286 W. CROMWELL AVE.
FRESNO, CALIFORNIA 93711-6162
559/449-2700 FAX 559/449-2715
www.ppeng.com

DESIGN ENGINEER: KLP
LICENSE NO: 16269
DRAFTED BY: FR
CHECKED BY: KLP
DATE: 5-03-2021
JOB NO: 21-598
PHASE: –
0 1"
ORIGINAL SCALE SHOWN IS ONE INCH. ADJUST SCALE FOR REDUCED OR ENLARGED PLANS.
SHEET E2.2
48 OF 54

PEZZONI ENGINEERING, INC.
CONSULTING ELECTRICAL ENGINEERS
1150 9TH Street Suite #1415 Modesto, CA 95354
PHONE: 209 . 554 . 4602
HTTP://WWW.PEZZNGR.COM

PEZZONI ENGINEERING, INC. © Copyrighted 2020

10/12/21 9:13:37 AM F:\21\598 CAMROSA WATER DISTRICT GAC\ENGR\SHEETS\E2.1 SLD.DWG frangel

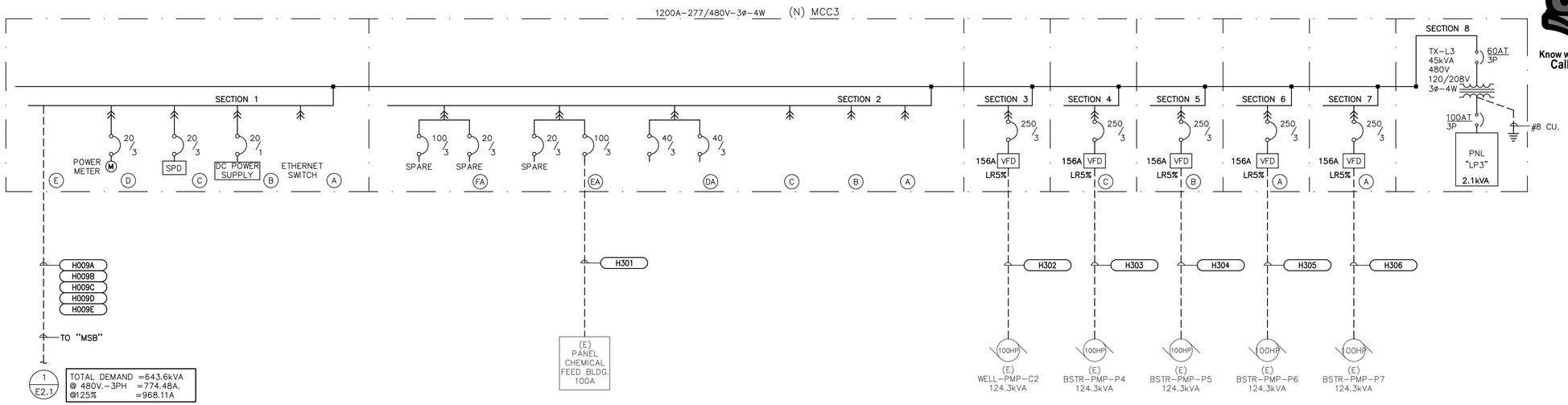


1 SINGLE LINE DIAGRAM – (N) MOTOR CONTROL CENTER ''MCC3''
SCALE: NONE

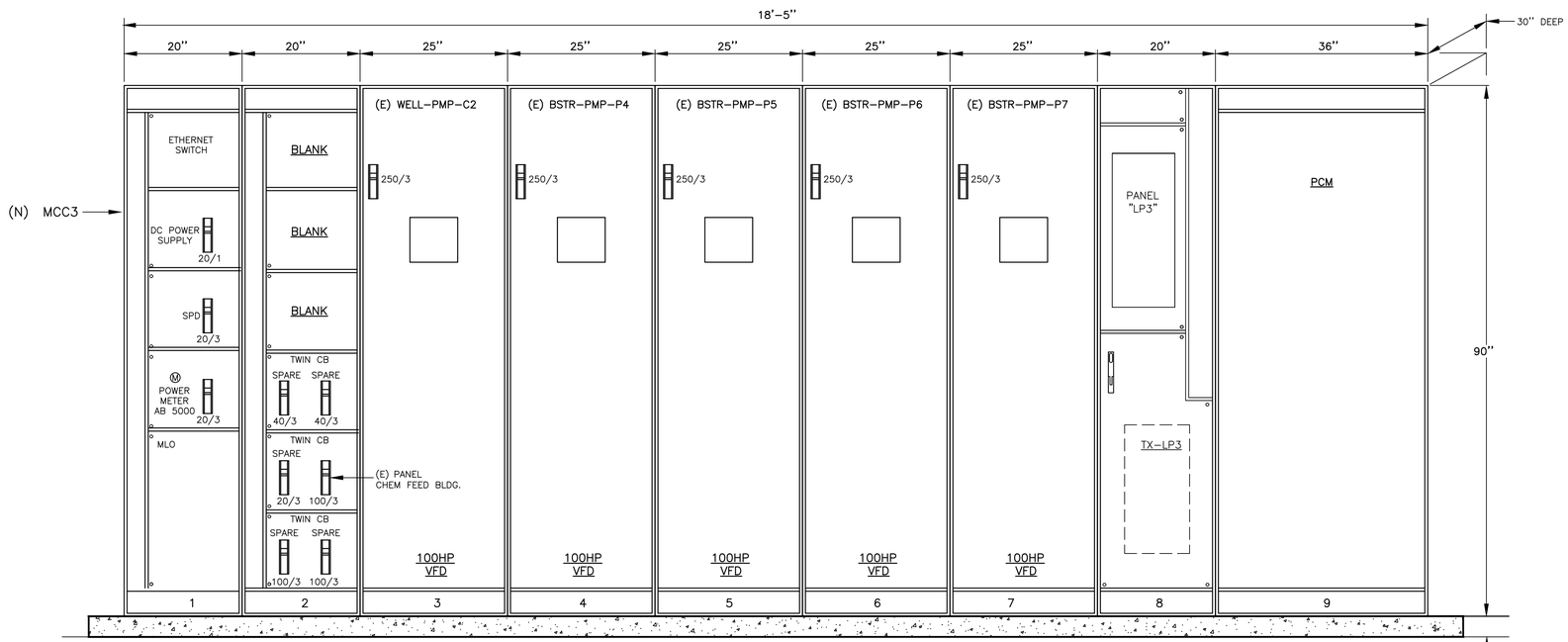


2 (N) MOTOR CONTROL CENTER –''MCC3'' ELEVATION DETAIL
SCALE: NONE

REFER TO STRUCTURAL FOR FOUNDATION REQIREMENTS

811 Know what's below. Call before you dig.

WARNING POWER LINES OVERHEAD

COPYRIGHT 2021 by PROVOST & PRITCHARD ENGINEERING GROUP, INC. ALL RIGHTS RESERVED
The firm of Provost & Pritchard Engineering Group, Inc. expressly reserves its common law copyright and other applicable property rights in these plans. These plans are not to be reproduced, changed, or copied in any form or manner whatsoever, nor are they to be assigned to a third party without first obtaining the written permission and consent of Provost & Pritchard Engineering Group, Inc. In the event of unauthorized reuse of these plans by a third party, the third party shall hold the firm of Provost & Pritchard Engineering Group, Inc. harmless, and shall bear the cost of Provost & Pritchard Engineering Group, Inc.'s legal fees associated with defending and enforcing these rights.

BID ISSUE
10-12-2021

| No. | REVISION | BY | DATE |
|---|---|---|---|

REGISTERED PROFESSIONAL ENGINEER
KEVIN L. PEZZONI
NO. 16269
STATE OF CALIFORNIA

1,2,3-TCP REMOVAL PROJECT FOR
CONEJO WELLS
CAMROSA WATER DISTRICT
CAMARILLO, CA

ELECTRICAL
MOTOR CONTROL CENTER - "MCC3"
SINGLE LINE DIAGRAM & ELEVATION DETAIL

EST. 1968
PROVOST & PRITCHARD
CONSULTING GROUP
An Employee Owned Company
286 WEST CROMWELL AVENUE
FRESNO, CALIFORNIA 93711-6162
559/449-2700 FAX 559/449-2715
www.ppeng.com

DESIGN ENGINEER: KLP
LICENSE NO: 16269
DRAFTED BY: FR
CHECKED BY: KLP
DATE: 5-03-2021
JOB NO: 21-598
PHASE: –
0 1"
ORIGINAL SCALE SHOWN IS ONE INCH. ADJUST SCALE FOR REDUCED OR ENLARGED PLANS.
SHEET E2.3


PEZZONI ENGINEERING, INC.
CONSULTING ELECTRICAL ENGINEERS
1150 9TH Street Suite #1415 Modesto, CA 95354
PHONE: 209 554 4602
HTTP://WWW.PEZENGR.COM

PEZZONI ENGINEERING, INC. © Copyrighted 2020

10/12/21 9:13:37 AM F:\21\598 CAMROSA WATER DISTRICT GAC\ENGR\SHEETS\E2.1 SLD.DWG frangel

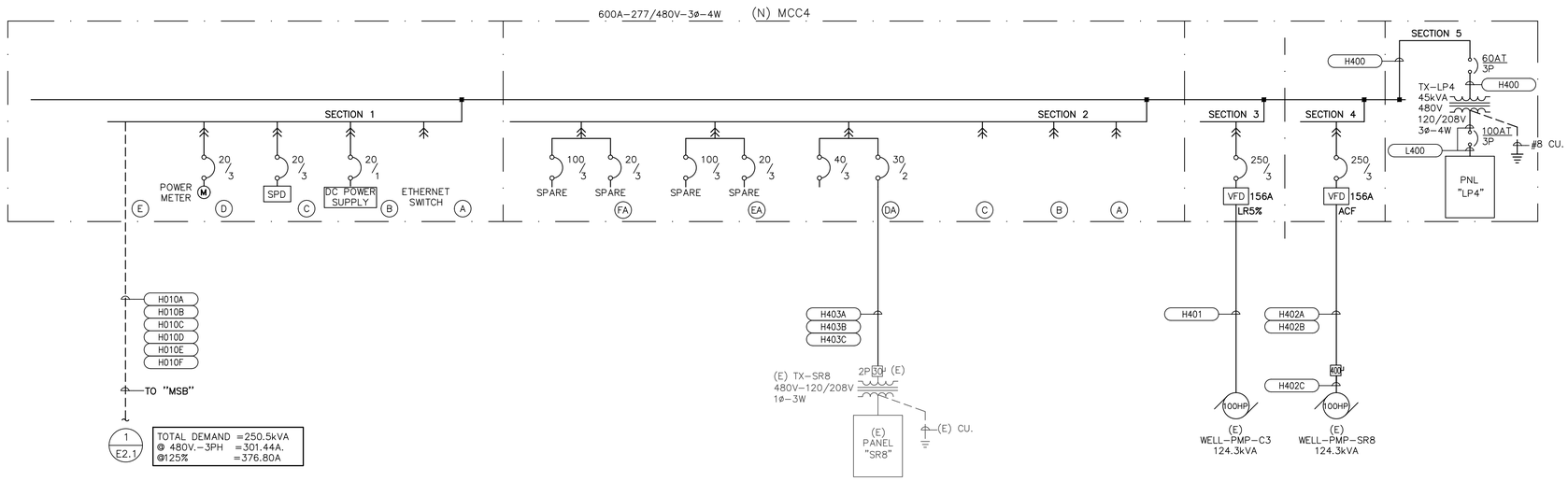


1 SINGLE LINE DIAGRAM – (N) MOTOR CONTROL CENTER "MCC4"

SCALE: NONE

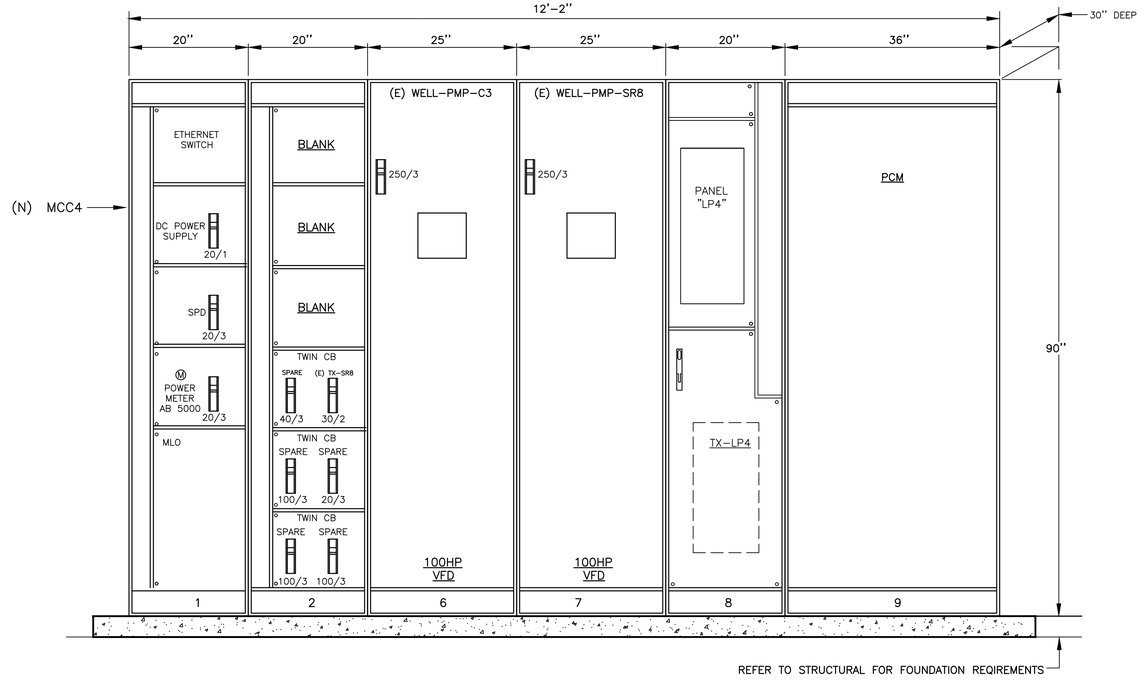


2 (N) MOTOR CONTROL CENTER –"MCC4" ELEVATION DETAIL

SCALE: NONE

811 Know what's below. Call before you dig.

WARNING POWER LINES OVERHEAD

COPYRIGHT 2021 by PROVOST & PRITCHARD ENGINEERING GROUP, INC. ALL RIGHTS RESERVED
The firm of Provost & Pritchard Engineering Group, Inc. expressly reserves its common law copyright and other applicable property rights in these plans. These plans are not to be reproduced, changed, or copied in any form or manner whatsoever, nor are they to be assigned to a third party without first obtaining the written permission and consent of Provost & Pritchard Engineering Group, Inc. In the event of unauthorized reuse of these plans by a third party, the third party shall hold the firm of Provost & Pritchard Engineering Group, Inc. harmless, and shall bear the cost of Provost & Pritchard Engineering Group, Inc.'s legal fees associated with defending and enforcing these rights.

| No. | REVISION | BY | DATE |
|---|---|---|---|
| | BID ISSUE 10-12-2021 | | |

REGISTERED PROFESSIONAL ENGINEER KEVIN L. PEZZONI NO. 16269 STATE OF CALIFORNIA

1,2,3-TCP REMOVAL PROJECT FOR CONEJO WELLS
CAMROSA WATER DISTRICT
CAMARILLO, CA

ELECTRICAL
MOTOR CONTROL CENTER - "MCC4"
SINGLE LINE DIAGRAM & ELEVATION DETAIL

EST. 1968 PROVOST & PRITCHARD CONSULTING GROUP
An Employee Owned Company
286 WEST CROMWELL AVENUE
FRESNO, CALIFORNIA 93711-6162
559/449-2700 FAX 559/449-2715
www.ppeng.com

DESIGN ENGINEER: KLP
LICENSE NO: 16269

| DRAFTED BY: FR | CHECKED BY: KLP |
|---|---|
| DATE: 5-03-2021 | |
| JOB NO: 21-598 | |
| PHASE: – | |

0 1"
ORIGINAL SCALE SHOWN IS ONE INCH. ADJUST SCALE FOR REDUCED OR ENLARGED PLANS.

SHEET E2.4

50 OF 54

PEZZONI ENGINEERING, INC.
CONSULTING ELECTRICAL ENGINEERS
1150 9TH Street Suite #1415 Modesto, CA 95354
PHONE: 209.554.4602
HTTP://WWW.PEZENGR.COM

PEZZONI ENGINEERING, INC. © Copyrighted 2020

10/12/21 9:13:38 AM F:\21\598 CAMROSA WATER DISTRICT GAC\ENGR\SHEETS\E2.1 SLD.DWG frangel

## 598 Camrosa Conduit & Cable Schedule

| CONDUIT ID# | | FROM | TO | QNTY | SIZE | TYPE | QNTY | SIZE | GND | QNTY | TYPE | NOTES |
|---|---|---|---|---|---|---|---|---|---|---|---|---|
| P | 001 | (E) S.C.E. UTILITY POLE | (N) S.C.E. XFMER | 1 | 4" | PVC40 | | | | | | PRIMARY PER S.C.E. |
| | | | | | | | | | | | | |
| H | 001 | (N) S.C.E. XFMER | UGPS | 7 | 5" | PVC40 | 4 | #400MCM | 250 | | | [1] SECONDARY PER S.C.E. |
| H | 002 | UGPS | M/M SECTION | | | | 24 | #400MCM | 250 | | | 2000A |
| H | 003 | M/M SECTION | ATS-1 | | | | 24 | #400MCM | 250 | | | 2000A |
| H | 004 | ATS-1 | MSB | | | | 24 | #400MCM | 250 | | | 2000A VIA WIREWAY |
| H | 005 | ATS-1 | EG-1 | 5 | 4" | RMC | 3 | #400MCM | #4/0 | | | [1][2][3] 1600A VIA WIREWAY |
| H | 006 | A MSB | P1 3'x5' VAULT POWER | 1 | 1" | PVC40 | 3 | #4 | #10 | | | |
| H | 006 | B P1 3'x5' VAULT POWER | IPC | 1 | 1" | PVC40 | 3 | #4 | #10 | | | IEM INTEGRATED POWER CENTER |
| H | 007 | A MSB | P1 3'x5' VAULT POWER | 1 | 1" | PVC40 | 3 | #10 | #10 | | | |
| H | 007 | B P1 3'x5' VAULT POWER | BSTR-PMP-CNPL | 1 | 1" | CRMC | 3 | #10 | #10 | | | [2] CO2 SYSTEM 480V.-3PH.-20A. |
| H | 008 | A MSB | P1 3'x5' VAULT POWER | 3 | 4" | PVC40 | 3 | #500MCM | #3/o | | | [1] 1200A MCC2 FEEDER |
| H | 008 | B P1 3'x5' VAULT POWER | P2 3'x5' VAULT POWER | 3 | 4" | PVC40 | 3 | #500MCM | #3/o | | | [1] 1200A MCC2 FEEDER |
| H | 008 | C P2 3'x5' VAULT POWER | MCC2 | 3 | 4" | PVC40 | 3 | #500MCM | #3/o | | | [1] 1200A MCC2 FEEDER |
| H | 009 | A MSB | P1 3'x5' VAULT POWER | 3 | 4" | PVC40 | 3 | #500MCM | #3/o | | | [1] 1200A MCC2 FEEDER |
| H | 009 | B P1 3'x5' VAULT POWER | P2 3'x5' VAULT POWER | 3 | 4" | PVC40 | 3 | #500MCM | #3/o | | | [1] 1200A MCC2 FEEDER |
| H | 009 | C P2 3'x5' VAULT POWER | P3 3'x5' VAULT POWER | 3 | 4" | PVC40 | 3 | #500MCM | #3/o | | | [1] 1200A MCC2 FEEDER |
| H | 009 | D P3 3'x5' VAULT POWER | P4 3'x5' VAULT POWER | 3 | 4" | PVC40 | 3 | #500MCM | #3/o | | | [1] 1200A MCC2 FEEDER |
| H | 009 | E P4 3'x5' VAULT POWER | MCC3 | 3 | 4" | PVC40 | 3 | #500MCM | #3/o | | | [1] 1200A MCC2 FEEDER |
| H | 010 | A MSB | P1 3'x5' VAULT POWER | 2 | 4" | PVC40 | 3 | #400MCM | #1 | | | [2] 600A MCC4 FEEDER |
| H | 010 | B P1 3'x5' VAULT POWER | P2 3'x5' VAULT POWER | 2 | 4" | PVC40 | 3 | #400MCM | #1 | | | [2] 600A MCC4 FEEDER |
| H | 010 | C P2 3'x5' VAULT POWER | P3 3'x5' VAULT POWER | 2 | 4" | PVC40 | 3 | #400MCM | #1 | | | [2] 600A MCC4 FEEDER |
| H | 010 | D P3 3'x5' VAULT POWER | P4 3'x5' VAULT POWER | 2 | 4" | PVC40 | 3 | #400MCM | #1 | | | [2] 600A MCC4 FEEDER |
| H | 010 | E P4 3'x5' VAULT POWER | MCC4 | 2 | 4" | PVC40 | 3 | #400MCM | #1 | | | [2] 600A MCC4 FEEDER |
| H | 011 | MSB | EG-FPMP-1 | 1 | 1" | CRMC | 3 | #12 | #12 | | | [1] DUPLEXER FUEL PUMP 460V.-3PH.-20A. |
| H | 012 | MSB | GATE OPERATOR #1/CONTROLLER | 1 | 1" | CRMC | 3 | #12 | #12 | | | 1HP MOTORIZED GATE |
| | | | | | | | | | | | | |
| H | 201 | MCC2 | 40-PMP-01 | 1 | 2 1/2" | CRMC | 3 | #250MCM | #4 | | | [2][3] (N) BOOSTER PUMP 100HP-156A |
| H | 202 | MCC2 | 40-PMP-02 | 1 | 2 1/2" | CRMC | 3 | #250MCM | #4 | | | [2][3] (N) BOOSTER PUMP 100HP-156A |
| H | 203 | MCC2 | (E) Z2-PMP-01 | 1 | 2 1/2" | CRMC | 3 | #250MCM | #4 | | | [2][3] (E) PUMP 100HP-156A |
| H | 204 | MCC2 | (E) Z2-PMP-02 | 1 | 2 1/2" | CRMC | 3 | #250MCM | #4 | | | [2][3] (E) PUMP 100HP-156A |
| H | 205 | MCC2 | (E) WELL-PMP-C4 | 1 | 2 1/2" | CRMC | 3 | #250MCM | #4 | | | [2][3] (E) WELL PUMP 100HP-156A |
| | | | | | | | | | | | | |
| H | 301 | MCC3 | (E) 100A PANEL CHEM FEED BLDG. | 1 | 1 1/2" | CRMC | 3 | #2 | #8 | | | [2][3] (N) 100A FEEDER TO (E) PANEL |
| H | 302 | MCC3 | (E) WELL-PMP-C2 | 1 | 2 1/2" | CRMC | 3 | #250MCM | #4 | | | [2][3] (E) WELL-PMP-C2 -100HP-156A |
| H | 303 | MCC3 | (E) BSTR-PMP-P4 | 1 | 2 1/2" | CRMC | 3 | #250MCM | #4 | | | [2][3] (E) BSTR-PMP-P4 100HP-156A |
| H | 304 | MCC3 | (E) BSTR-PMP-P5 | 1 | 2 1/2" | CRMC | 3 | #250MCM | #4 | | | [2][3] (E) BSTR-PMP-P5 100HP-156A |
| H | 305 | MCC3 | (E) BSTR-PMP-P6 | 1 | 2 1/2" | CRMC | 3 | #250MCM | #4 | | | [2][3] (E) BSTR-PMP-P6 100HP-156A |
| H | 306 | MCC3 | (E) BSTR-PMP-P7 | 1 | 2 1/2" | CRMC | 3 | #250MCM | #4 | | | [2][3] (E) BSTR-PMP-P7 100HP-156A |
| | | | | | | | | | | | | |
| H | 400 | MCC4 | TX-SR8 | 1 | 2" | CRMC | 3 | #10 | #10 | | | [2] |
| H | 401 | MCC4 | (N) STUB AT (E) WELL-PMP-C3 | 1 | 2 1/2" | CRMC | 3 | #250MCM | #4 | | | [2][3] (E) WELL-PMP-C3 -100HP-156A |
| H | 402 | A MCC4 | P5 3'x5' VAULT POWER | 1 | 2 1/2" | PVC 40 | 3 | #250MCM | #4 | | | (N) FEEDER WELL-PMP-SR8 |
| H | 402 | B P5 3'x5' VAULT POWER | P6 3'x5' VAULT POWER | 1 | 2 1/2" | PVC 40 | 3 | #250MCM | #4 | | | (N) FEEDER WELL-PMP-SR8 |
| H | 402 | C P6 3'x5' VAULT POWER | (N) STUB AT (E) WELL-PMP-SR8 | 1 | 2 1/2" | CRMC | 3 | #250MCM | #4 | | | [2] (N) FEEDER LB INTO BLDG./(N) DISC |
| H | 402 | D (N) 400A/3P DISCONNECT SW | (N) STUB AT (N) WELL-PMP-SR8 | 1 | 2 1/2" | CRMC | 3 | #250MCM | #4 | | | [3] (E) WELL-PMP-SR8 -100HP-156A |
| H | 403 | A MCC4 | P5 3'x5' VAULT POWER | 1 | 2" | CRMC | 2 | #10 | #10 | | | (N) FEEDER (E) SINGLE PHASE 30A DISC./PANEL SR8 |
| H | 403 | B P5 3'x5' VAULT POWER | P6 3'x5' VAULT POWER | 1 | 2" | CRMC | 2 | #10 | #10 | | | |
| H | 403 | C P6 3'x5' VAULT POWER | (E) 30A/2P DISC. SWITCH | 1 | 2" | CRMC | 2 | #10 | #10 | | | 2"CRMC RISER LB INTO (E) 30A/2P DISC. |
| | | | | | | | | | | | | |
| L | 000 | A MCC2-LP2 | P2 3'x5' VAULT POWER | 1 | 1" | PVC 40 | 2 | #10 | #10 | | | LP2-1,3,5-7 |
| | | | | | | | 4 | #12 | | | | |
| L | 000 | B P2 3'x5' VAULT POWER | EG-1 | 1 | 1" | RMC | 2 | #10 | #10 | | | [2][3] LP2-1,3,5-7 |
| | | | | | | | 4 | #12 | | | | |
| | | | | | | | | | | | | |
| L | 101 | LP1 | LP1-PMC | 1 | 1" | RMC | 2 | #12 | #12 | | | [2] LP1-1 |
| L | 102 | NOT USED | | | | | | | | | | |
| L | 103 | A LP1 | RECP WP/GFCI | 1 | 1" | CRMC | 8 | #12 | #12 | | | [2] LP1-3,5,7,9 |
| L | 103 | B RECP WP/GFCI | RECP WP/GFCI SW COMBO | 1 | 1" | CRMC | 6 | #12 | #12 | | | LP1-5,7,9 |
| L | 103 | C RECP WP/GFCI | RECP WP/GFCI | 1 | 1" | CRMC | 4 | #12 | #12 | | | LP1-7,9 |
| L | 103 | D RECP WP/GFCI | RECP WP/GFCI | 1 | 1" | CRMC | 2 | #12 | #12 | | | LP1-9 |
| L | 103 | E RECP WP/GFCI | CHM-MTR-EF-01 | 1 | 1" | CRMC | 2 | #12 | #12 | | | LP1-3 |
| L | 104 | LP1 | CHM-MTR-PMP-01 | 1 | 1" | CRMC | 2 | #12 | #12 | | | [3] LP1-11 |
| L | 105 | LP1 | CHM-MTR-PMP-02 | 1 | 1" | CRMC | 2 | #12 | #12 | | | [3] LP1-13 |
| L | 106 | LP1 | HEAT TRACE @ SODIUM HYDROXIDE ENCL | 1 | 1" | CRMC | 2 | #12 | #12 | | | [2][3] LP1-15 |
| L | 107 | A LP1 | J BOX @ CAC FIT/FE-01A | 1 | 1" | CRMC | 4 | #12 | #12 | | | [2][3] LP1-2,4 |
| L | 107 | B J BOX @ CAC FIT/FE-01A | J BOX @ CAC FIT/FE-02A | 1 | 1" | CRMC | 4 | #12 | #12 | | | [2][3] LP1-3,4 |
| L | 107 | C J BOX @ CAC FIT/FE-02A | J BOX @ CAC FIT/FE-03A | 1 | 1" | CRMC | 4 | #12 | #12 | | | [2][3] LP1-2,4 |
| L | 107 | D J BOX @ (F) CAC FIT/FE-03A | J BOX @ (F) CAC FIT/FE-04A | 1 | 1" | CRMC | 2 | #12 | #12 | | | [2][3] LP1-4 |
| L | 107 | E J BOX @ (F) CAC FIT/FE-04A | J BOX @ (F) CAC FIT/FE-05A | 1 | 1" | CRMC | 2 | #12 | #12 | | | [2][3] LP1-4 |
| L | 108 | A LP1 | J BOX @ CAC-ACTU-01A | 1 | 1" | CRMC | 10 | #12 | #12 | | | [2][3] LP1-6,8,10,12,14 |
| L | 108 | B J BOX @ CAC-ACTU-01A | J BOX @ CAC-ACTU-02A | 1 | 1" | CRMC | 8 | #12 | #12 | | | [2][3] LP1-8,10,12,14 |
| L | 108 | C J BOX @ CAC-ACTU-02A | J BOX @ CAC-ACTU-03A | 1 | 1" | CRMC | 6 | #12 | #12 | | | [2][3] LP1-10,12,14 |
| L | 108 | D J BOX @ CAC-ACTU-03A | J BOX @ (F) CAC-ACTU-04A | 1 | 1" | CRMC | 4 | #12 | #12 | | | [2][3] LP1-12,14 |
| L | 108 | E J BOX @ (F) CAC-ACTU-04A | J BOX @ (F) CAC-ACTU-05A | 1 | 1" | CRMC | 2 | #12 | #12 | | | [2][3] LP1-14 |
| L | 109 | A LP1 | J BOX @ CAC-ACTU-01B | 1 | 1" | CRMC | 10 | #12 | #12 | | | [2][3] LP1-16,18,20,22,24 |
| L | 109 | B J BOX @ CAC-ACTU-01B | J BOX @ CAC-ACTU-02B | 1 | 1" | CRMC | 8 | #12 | #12 | | | [2][3] LP1-18,20,22,24 |
| L | 109 | C J BOX @ CAC-ACTU-02B | J BOX @ CAC-ACTU-03B | 1 | 1" | CRMC | 6 | #12 | #12 | | | [2][3] LP1-20,22,24 |
| L | 109 | D J BOX @ CAC-ACTU-03B | J BOX @ (F) CAC-ACTU-04B | 1 | 1" | CRMC | 4 | #12 | #12 | | | [2][3] LP1-22,24 |
| L | 109 | E (F) J BOX @ MTR-ACTU-VLV-4B | (F) J BOX @ MTR-ACTU-VLV-5B | 1 | 1" | CRMC | 2 | #12 | #12 | | | [2][3] LP1-24 |
| L | 110 | LP1 | J BOX @ RECP WP/GFCI | 1 | 1" | CRMC | 2 | #12 | #12 | | | [2] LP1-26 |
| L | 111 | A LP1 | J BOX @ RECP WP/GFCI | 1 | 1" | CRMC | 6 | #12 | #12 | | | [2] LP1-17,19,21 |
| L | 111 | B J BOX @ RECP WP/GFCI | J BOX @ (F) CAC FIT/FE-01B | 1 | 1" | CRMC | 4 | #12 | #12 | | | [2][3] LP1-19,21 |
| L | 111 | C J BOX @ (F) CAC FIT/FE-01B | J BOX @ (F) CAC FIT/FE-02B | 1 | 1" | CRMC | 4 | #12 | #12 | | | [2][3] LP1-19,21 |
| L | 111 | D J BOX @ (F) CAC FIT/FE-02B | J BOX @ (F) CAC FIT/FE-06 | 1 | 1" | CRMC | 2 | #12 | #12 | | | [2][3] LP1-19 |
| L | 111 | E J BOX @ CAC FIT/FE-02B | J BOX @ CAC FIT/FE-03B | 1 | 1" | CRMC | 4 | #12 | #12 | | | [2][3] LP1-19,21 |
| L | 111 | F J BOX @ CAC FIT/FE-03B | J BOX @ (F) CAC FIT/FE-04B | 1 | 1" | CRMC | 2 | #12 | #12 | | | [2][3] LP1-21 |
| L | 111 | G J BOX @ (F) FIT/FE-01-4B | J BOX @ (F) FIT/FE-05B | 1 | 1" | CRMC | 2 | #12 | #12 | | | [2][3] LP1-21 |
| | | | | | | | | | | | | |
| L | 201 | A LP2 | J BOX @ 40-FIT/FE-01/02 | 1 | 1" | CRMC | 4 | #12 | #12 | | | [2][3] LP2-2,4 |
| L | 201 | B J BOX @ 40-FIT/FE-01/02 | 40-FIT/FE-01 | 1 | 1" | FLEX | 2 | #12 | #12 | | | [2][3] LP2-2 |
| L | 201 | C J BOX @ 40-FIT/FE-01/02 | 40-FIT/FE-02 | 1 | 1" | CRMC | 2 | #12 | #12 | | | [2][3] LP2-4 |
| L | 202 | A LP2 | J BOX @ Z2-PMP-ACT-01 | 1 | 1" | CRMC | 10 | #12 | #12 | | | [2][3] LP2-9,11,13,15,17 |
| L | 202 | B J BOX @ Z2-PMP-ACT-01 | J BOX @ Z2-PMP-ACT-02 | 1 | 1" | CRMC | 2 | #12 | #12 | | | [2][3] LP2-11 |
| L | 202 | C J BOX @ Z2-PMP-ACT-01 | J BOX @ Z2-FIT-01 | 1 | 1" | CRMC | 6 | #12 | #12 | | | [2][3] LP2-13,15,17 |
| L | 202 | D J BOX @ Z2-FIT-01 | Z2-FIT-01 | 1 | 1" | FLEX | 2 | #12 | #12 | | | [2][3] LP2-13 |
| L | 202 | E J BOX @ Z2-FIT-01 | Z2-FIT-02 | 1 | 1" | FLEX | 2 | #12 | #12 | | | [2][3] LP2-13 |
| L | 202 | F J BOX @ Z2-FIT-01 | J BOX @ C4-FIT-01 | 1 | 1" | CRMC | 4 | #12 | #12 | | | [2][3] LP2-15,17 |
| L | 202 | G J BOX @ C4-FIT-01 | J BOX @ C4-ACT-01 | 1 | 1" | FLEX | 2 | #12 | #12 | | | [2][3] LP2-17 FLEX TO C4-ACT-01 |
| L | 203 | LP2 | J BOX @ Z2-FIT-00 | 1 | 1" | CRMC | 2 | #12 | #12 | | | [2][3] LP2-6 FLEX TO Z2-FIT-00 |
| | | | | | | | | | | | | |
| L | 301 | A LP3 | J BOX @ (E) BSTR-FIT-01 | 1 | 1" | CRMC | 4 | #12 | #12 | | | [2][3] LP3-1,3 |
| L | 301 | B J BOX @ (E) BSTR-FIT-01 | J BOX @ (E) BSTR-ACT-01 | 1 | 1" | CRMC | 2 | #12 | #12 | | | [2][3] LP3-3 |
| L | 302 | A LP3 | J BOX @ (E) C2-FIT-01 | 1 | 1" | CRMC | 4 | #12 | #12 | | | [2][3] LP3-5,7 |
| L | 302 | B J BOX @ (E) C2-FIT-01 | (E) C2-FIT-01 | 1 | 1" | FLEX | 2 | #12 | #12 | | | [2][3] LP3-5 |
| L | 302 | C J BOX @ (E) C2-FIT-01 | (E) C2-ACT-01 | 1 | 1" | FLEX | 2 | #12 | #12 | | | [2][3] LP3-7 |
| L | 303 | LP3 | J BOX @ (E) BSTR-FIT-02 | 1 | 1" | CRMC | 2 | #12 | #12 | | | [2][3] LP3-2 |
| | | | | | | | | | | | | |
| L | 400 | TX-LP4 | MCC4-LP4 | | | | 4 | #2 | #8 | | | SECONDARY 100A PANEL LP4 |
| L | 401 | A MCC4-LP4 | (N) J BOX AT (E) C3-FIT-01 | 1 | 1" | CRMC | 4 | #12 | #12 | | | [2][3] LP4-1,3 |
| L | 401 | B (N) J BOX AT (E) C3-FIT-01 | (E) C3-FIT-01 | 1 | 1" | FLEX | 2 | #12 | #12 | | | [2][3] LP4-1 |
| L | 401 | C (N) J BOX AT (E) C3-FIT-01 | (E) C3-ACT-01 | 1 | 1" | FLEX | 2 | #12 | #12 | | | [2][3] LP4-3 |
| L | 402 | MCC4-LP4 | (N) RECP WP/GFCI | 1 | 1" | CRMC | 2 | #12 | #12 | | | [2][3] LP4-5 |
| | | | | | | | | | | | | |
| C | 000 | A MCC2-PCM | C2 3'x5' VAULT COMM | 1 | 1" | RMC | 12 | #14 | #14 | | | [2][3] |
| C | 000 | B C2 3'x5' VAULT COMM | C1 3'x5' VAULT COMM | 1 | 1" | RMC | 12 | #14 | #14 | | | [2][3] |
| C | 000 | C C1 3'x5' VAULT COMM | EG-1 | 1 | 1" | RMC | 12 | #14 | #14 | | | [2][3] |
| | | | | | | | | | | | | |
| C | 001 | LP1-PMC | C1 3'x5' VAULT COMM | 1 | 2" | PVC 40 | | | | 1 | FOM8-OSP | COMM TO LP1-PCM |
| C | 002 | A C1 3'x5' VAULT COMM | C2 3'x5' VAULT COMM | 1 | 2" | PVC 40 | | | | 1 | FOM8-OSP | COMM TO MCC2-PCM |
| C | 002 | B C2 3'x5' VAULT COMM | MCC2-PCM | 1 | 2" | PVC 40 | | | | 1 | FOM8-OSP | |
| C | 003 | A C1 3'x5' VAULT COMM | C2 3'x5' VAULT COMM | 1 | 2" | PVC 40 | | | | 1 | FOM8-OSP | COMM TO MCC3-PCM |
| C | 003 | B C2 3'x5' VAULT COMM | C3 3'x5' VAULT COMM | 1 | 2" | PVC 40 | | | | 1 | FOM8-OSP | |
| C | 003 | C C3 3'x5' VAULT COMM | C4 3'x5' VAULT COMM | 1 | 2" | PVC 40 | | | | 1 | FOM8-OSP | |
| C | 003 | D C4 3'x5' VAULT COMM | MCC3-PCM | 1 | 2" | PVC 40 | | | | 1 | FOM8-OSP | |
| C | 004 | A C1 3'x5' VAULT COMM | C2 3'x5' VAULT COMM | 1 | 2" | PVC 40 | | | | 1 | FOM8-OSP | COMM TO MCC4-PCM |
| C | 004 | B C2 3'x5' VAULT COMM | C3 3'x5' VAULT COMM | 1 | 2" | PVC 40 | | | | 1 | FOM8-OSP | |
| C | 004 | C C3 3'x5' VAULT COMM | C4 3'x5' VAULT COMM | 1 | 2" | PVC 40 | | | | 1 | FOM8-OSP | |
| C | 004 | D C4 3'x5' VAULT COMM | MCC4-PMC | 1 | 2" | PVC 40 | | | | 1 | FOM8-OSP | |
| C | 005 | EG-1 | EG-FPMP-1 | 1 | 1" | RMC | 10 | #14 | #14 | | | [2][3] |
| C | 006 | ATS-1 | EG-1 | 1 | 1" | RMC | 4 | #14 | #14 | | | [2] |
| C | 007 | MCC2-PMC | C2 3'x5' VAULT COMM | 1 | 1" | RMC | | | | 1 | 2C/16STP | [2][3] |
| C | 007 | C2 3'x5' VAULT COMM | C1 3'x5' VAULT COMM | 1 | 1" | RMC | | | | 1 | 2C/16STP | [2][3] |
| C | 007 | C1 3'x5' VAULT COMM | EG-FPMP-1 | 1 | 1" | RMC | | | | 1 | 2C/16STP | [2][3] |
| C | 008 | MCC2-PMC | C2 3'x5' VAULT COMM | 1 | 1" | PVC 40 | | | | 1 | STP6-OSP | |
| C | 008 | C2 3'x5' VAULT COMM | C1 3'x5' VAULT COMM | 1 | 1" | PVC 40 | | | | 1 | STP6-OSP | |
| C | 008 | C1 3'x5' VAULT COMM | MSB-DIST. | 1 | 1" | PVC 40 | | | | 1 | STP6-OSP | |
| C | 009 | A MCC2-PMC | C2 3'x5' VAULT COMM | 1 | 1" | RMC | | | | | | |
| C | 009 | B C2 3'x5' VAULT COMM | C1 3'x5' VAULT COMM | 1 | 1" | RMC | | | | | | |
| C | 009 | C C1 3'x5' VAULT COMM | GATE OPERATOR #1/CONTROLLER | 1 | 1" | RMC | | | | | | |
| C | 010 | A GATE OPERATOR #1/CONTROLLER | GATE OPERATOR #2 | 1 | 1" | RMC | | | | | | |
| C | 010 | B GATE OPERATOR #1/CONTROLLER | KEYPAD OR PHONE ACCESS SYSTEM | 1 | 1" | RMC | | | | | | |
| C | 010 | C GATE OPERATOR #1/CONTROLLER | SAFETY LOOP #1 | 1 | 1" | RMC | | | | | | |
| C | 010 | D GATE OPERATOR #1/CONTROLLER | SAFETY LOOP #2 | 1 | 1" | RMC | | | | | | |
| C | 010 | E GATE OPERATOR #1/CONTROLLER | EXIT LOOP | 1 | 1" | RMC | | | | | | |

## 598 Camrosa Conduit & Cable Schedule

| CONDUIT ID# | | FROM | TO | QNTY | SIZE | TYPE | QNTY | SIZE | GND | QNTY | TYPE | NOTES |
|---|---|---|---|---|---|---|---|---|---|---|---|---|
| C | 101 | LP1-PCM | CO2 SYSTEM BSTR-PMP-CNPL | 2 | 1" | CRMC | | | | 1 | STP6-OSP | [2] |
| C | 102 | NOT USED | | | | | | | | | | |
| C | 103 | A LP1-PCM | CHM-MTR-PMP-01 | 2 | 1" | CRMC | 10 | #14 | #14 | 2 | 2c/16 STP | [2][3] |
| C | 103 | B LP1-PCM | CHM-MTR-PMP-02 | 2 | 1" | CRMC | 10 | #14 | #14 | 2 | 2c/16 STP | [2][3] |
| C | 103 | C LP1-PCM | AIT-01 | 1 | 1" | CRMC | | | | 1 | 2c/16 STP | [2][3] |
| C | 103 | D LP1-PCM | AIT-02A | 1 | 1" | CRMC | | | | 1 | 2c/16 STP | [2][3] |
| C | 103 | E LP1-PCM | AIT-02B | 1 | 1" | CRMC | | | | 1 | 2c/16 STP | [2][3] |
| C | 104 | LP1-PCM | J BOX @ CAC FIT/FE-01A | 1 | 1" | CRMC | | | | 1 | 2c/16 STP | [2][3] |
| C | 105 | LP1-PCM | J BOX @ CAC FIT/FE-02A | 1 | 1" | CRMC | | | | 1 | 2c/16 STP | [2][3] |
| C | 106 | LP1-PCM | J BOX @ CAC FIT/FE-03A | 1 | 1" | CRMC | | | | 1 | 2c/16 STP | [2][3] |
| C | 107 | LP1-PCM | J BOX @ (F) CAC FIT/FE-04A | 1 | 1" | CRMC | | | | | | [4] |
| C | 108 | LP1-PCM | J BOX @ (F) CAC FIT/FE-05A | 1 | 1" | CRMC | | | | | | [4] |
| C | 109 | LP1-PCM | J BOX @ CAC-ACTU-01A | 1 | 1" | CRMC | | | | 1 | 2c/16 STP | [2][3] |
| C | 110 | LP1-PCM | J BOX @ CAC-ACTU-02A | 1 | 1" | CRMC | | | | 1 | 2c/16 STP | [2][3] |
| C | 111 | LP1-PCM | J BOX @ CAC-ACTU-03A | 1 | 1" | CRMC | | | | 1 | 2c/16 STP | [2][3] |
| C | 112 | LP1-PCM | J BOX @ (F) CAC-ACTU-04A | 1 | 1" | CRMC | | | | | | [4] |
| C | 113 | LP1-PCM | J BOX @ (F) CAC-ACTU-05A | 1 | 1" | CRMC | | | | | | [4] |
| C | 114 | LP1-PCM | J BOX @ CAC-ACTU-01B | 1 | 1" | CRMC | | | | 1 | 2c/16 STP | [2][3] |
| C | 115 | LP1-PCM | J BOX @ CAC-ACTU-02B | 1 | 1" | CRMC | | | | 1 | 2c/16 STP | [2][3] |
| C | 116 | LP1-PCM | J BOX @ CAC-ACTU-03B | 1 | 1" | CRMC | | | | 1 | 2c/16 STP | [2][3] |
| C | 117 | LP1-PCM | J BOX @ (F) CAC-ACTU-04B | 1 | 1" | CRMC | | | | | | [4] |
| C | 118 | LP1-PCM | J BOX @ (F) CAC-ACTU-05B | 1 | 1" | CRMC | | | | | | [4] |
| C | 119 | LP1-PCM | J BOX @ CAC-DPIT-01 | 1 | 1" | CRMC | | | | 1 | 2c/16 STP | [2][3] |
| C | 120 | LP1-PCM | J BOX @ CAC FIT/FE-01B | 1 | 1" | CRMC | | | | 1 | 2c/16 STP | [2][3] |
| C | 121 | LP1-PCM | J BOX @ CAC FIT/FE-06 | 1 | 1" | CRMC | | | | 1 | 2c/16 STP | [2][3] |
| C | 122 | LP1-PCM | J BOX @ CAC FIT/FE-02B | 1 | 1" | CRMC | | | | 1 | 2c/16 STP | [2][3] |
| C | 123 | LP1-PCM | J BOX @ CAC FIT/FE-03B | 1 | 1" | CRMC | | | | 1 | 2c/16 STP | [2][3] |
| C | 124 | LP1-PCM | J BOX @ (F) CAC FIT/FE-04B | 1 | 1" | CRMC | | | | | | [4] |
| C | 125 | LP1-PCM | J BOX @ (F) CAC FIT/FE-05B | 1 | 1" | CRMC | | | | | | [4] |
| C | 126 | LP1-PCM | CHEM LIT/LE-01 | 1 | 1" | CRMC | | | | 1 | 2c/16 STP | [2][3] |
| | | | | | | | | | | | | |
| C | 201 | MCC2-PCM | LIT-40-01 | 1 | 1" | CRMC | | | | 1 | 2c/16 STP | [2][3] |
| C | 202 | MCC2-PCM | J BOX @ PIT-40-01 | 1 | 1" | CRMC | | | | 1 | 2c/16 STP | [2][3] |
| C | 203 | MCC2-PCM | J BOX @ FIT/FE-02 | 1 | 1" | CRMC | | | | 1 | 2c/16 STP | [2][3] |
| C | 204 | MCC2-PCM | J BOX @ FIT/FE-01 | 1 | 1" | CRMC | | | | 1 | 2c/16 STP | [2][3] |
| C | 205 | NOT USED | | | | | | | | | | |
| C | 206 | NOT USED | | | | | | | | | | |
| C | 207 | MCC2-PCM | J BOZ @ (E) SV-202 | 1 | 1" | CRMC | 2 | #12 | #12 | | | [2][3] |
| C | 208 | MCC2-PCM | J BOX @ (E) SV-201 | 1 | 1" | CRMC | 2 | #12 | #12 | | | [2][3] |
| C | 209 | MCC2-PCM | J BOX @ (E) PIT-Z2-01 | 1 | 1" | CRMC | | | | 1 | 2c/16 STP | [2][3] |
| C | 210 | MCC2-PCM | J BOX @ Z2-PMP-ACT-01 | 1 | 1" | CRMC | 10 | #14 | #14 | | | [2][3] |
| C | 211 | MCC2-PCM | J BOX @ Z2-PMP-ACT-02 | 1 | 1" | CRMC | 10 | #14 | #14 | | | [2][3] |
| C | 212 | MCC2-PCM | J BOX @ (E) Z2-PMP-01 | 1 | 1" | CRMC | | | | | | [2][3] |
| C | 213 | MCC2-PCM | J BOX @ (E) Z2-PMP-02 | 1 | 1" | CRMC | | | | | | [2][3] |
| C | 214 | MCC2-PCM | J BOX @ Z2-FIT-02 | 1 | 1" | CRMC | | | | 1 | 2c/16 STP | [2][3] |
| C | 215 | MCC2-PCM | J BOX @ Z2-FIT-01 | 1 | 1" | CRMC | | | | 1 | 2c/16 STP | [2][3] |
| C | 216 | MCC2-PCM | J BOX @ C4-SV-01 | 1 | 1" | CRMC | 2 | #12 | #12 | | | [2][3] |
| C | 217 | MCC2-PCM | J BOX @ C4-FIT-01 | 1 | 1" | CRMC | | | | 1 | 2c/16 STP | [2][3] |
| C | 218 | A MCC2-PCM | J BOX @ C4-LIT-01 | 1 | 1" | CRMC | | | | 1 | 2c/16 STP | [2][3] |
| C | 218 | B J BOX @ C4-LIT-01 | C4-LIT-01 | 1 | 1" | FLEX | | | | 1 | 2c/16 STP | [2][3] |
| C | 219 | A MCC2-PCM | J BOX @ C4-LIT-01 | 1 | 1" | CRMC | 10 | #14 | #14 | | | [2][3] |
| C | 219 | B J BOX @ C4-LIT-01 | C4-ACT-01 | 1 | 1" | FLEX | 10 | #14 | #14 | | | [2][3] |
| C | 220 | A MCC2-PCM | J BOX @ C4-LIT-01 | 1 | 1" | CRMC | | | | 1 | 2c/16 STP | [2][3] |
| C | 220 | B J BOX @ C4-LIT-01 | C4-PIT-01 | 1 | 1" | FLEX | | | | 1 | 2c/16 STP | [2][3] |
| C | 221 | MCC2-PCM | J BOX @ Z2-FIT-00 | 1 | 1" | CRMC | | | | | | |
| | | | | | | | | | | | | |
| C | 301 | MCC3-PCM | J BOX @ (E) BSTR-FIT-01 | 1 | 1" | CRMC | | | | 1 | 2c/16 STP | [2][3] |
| C | 302 | A MCC3-PCM | J BOX @ (E) BSTR-PIT-01 | 1 | 1" | CRMC | | | | 1 | 2c/16 STP | [2][3] |
| C | 302 | B J BOX @ (E) BSTR-PIT-01 | (E) BSTR-PIT-01 | 1 | 1" | FLEX | | | | 1 | 2c/16 STP | [2][3] |
| C | 302 | C J BOX @ (E) BSTR-PIT-01 | (E) BSTR-ACT-01 | 1 | 1" | FLEX | 10 | #14 | #14 | | | [2][3] |
| C | 303 | A MCC3-PCM | J BOX @ (E) 2C-ACT-01 | 1 | 1" | CRMC | 10 | #14 | #14 | | | [2][3] |
| C | 303 | B J BOX @ (E) 2C-ACT-01 | (E) 2C-ACT-01 | 1 | 1" | FLEX | 10 | #14 | #14 | | | [2][3] |
| C | 303 | C J BOX @ (E) 2C-ACT-01 | (E) 2C-FIT-01 | 1 | 1" | FLEX | | | | 1 | 2c/16 STP | [2][3] |
| C | 304 | MCC3-PCM | STUB AT (E) WELL-PMP-C2 FOR (E) C2-SV-01 | 1 | 1" | CRMC | 2 | #12 | #12 | | | [2][3] |
| C | 305 | MCC3-PCM | STUB AT (E) WELL-PMP-C2 FOR (E) LIT-C2-01 | 1 | 1" | CRMC | | | | 1 | 2c/16 STP | [2][3] |
| C | 306 | MCC3-PCM | STUB INTO (E) COMM CABINET | 1 | 2" | CRMC | | | | 1 | FOM8-OSP | [2] |
| C | 307 | MCC3-PCM | J BOX @ BSTR-LIT-01 | 1 | 1" | CRMC | | | | 1 | 2c/16 STP | [2][3] |
| C | 308 | MCC3-PCM | J BOX @ (E) BSTR-FIT-02 | 1 | 1" | CRMC | | | | 1 | 2c/16 STP | [2][3] (E) FLOW METER |
| C | 309 | MCC3-PCM | J BOX @ (E) BSTR-PIT-02 | 1 | 1" | CRMC | | | | 1 | 2c/16 STP | [2][3] (E) PRESSURE TRANSMITTER |
| C | 310 | A MCC3-PCM | J BOX @ (E) P4-SV-01 | 1 | 1" | CRMC | 2 | #12 | #12 | | | [2][3] |
| C | 310 | B J BOX @ (E) P4-SV-01 | (E) P4-SV-01 | 1 | 1" | CRMC | 2 | #12 | #12 | | | [2][3] |
| C | 310 | C J BOX @ (E) P4-SV-01 | J BOX @ (E) P4-PS-01 | 1 | 1" | CRMC | 2 | #14 | #14 | | | [2][3] |
| C | 310 | D J BOX @ (E) P4-PS-01 | (E) P4-PS-01 | 1 | 1" | FLEX | 2 | #14 | #14 | | | [2][3] |
| C | 310 | E J BOX @ (E) P4-PS-01 | J BOX @ (E) P4-VALV-01 | 1 | 1" | FLEX | 10 | #14 | #14 | | | [2][3] |
| C | 310 | F J BOX @ (E) P4-VALV-01 | (E) P4-SV-02 | 1 | 1" | FLEX | 2 | #12 | #12 | | | [2][3] |
| C | 311 | A MCC3-PCM | J BOX @ (E) P5-SV-01 | 1 | 1" | CRMC | 2 | #12 | #12 | | | [2][3] |
| C | 311 | B J BOX @ (E) P5-SV-01 | (E) P5-SV-01 | 1 | 1" | CRMC | 2 | #12 | #12 | | | [2][3] |
| C | 311 | C J BOX @ (E) P5-SV-01 | J BOX @ (E) P5-PS-01 | 1 | 1" | CRMC | 2 | #14 | #14 | | | [2][3] |
| C | 311 | D J BOX @ (E) P5-PS-01 | (E) P5-PS-01 | 1 | 1" | FLEX | 2 | #14 | #14 | | | [2][3] |
| C | 311 | E J BOX @ (E) P5-PS-01 | J BOX @ (E) P5-VALV-01 | 1 | 1" | FLEX | 10 | #14 | #14 | | | [2][3] |
| C | 311 | F J BOX @ (E

## PANELBOARD SCHEDULE

**PANEL:** LP1 — **LOCATION:** IPC
**BUS RATING:** 125A — **PHASE:** 3 — **SCCR:** 22k — **NEMA TYPE:** 4X
**VOLTAGE:** 120/208 V. — **WIRE:** 4 — **BUSSING:** Cu — **MOUNTING:** SURFACE

| CKT | DESCRIPTION | BRKR | TYPE | LOAD | A (va) | B (va) | C (va) | LOAD | TYPE | BRKR | DESCRIPTION | CKT |
|---|---|---|---|---|---|---|---|---|---|---|---|---|
| 1 | LP1-PMC | 20/1 | C | 100 | 400 | | | 300 | C | 20/1 | GAC-FIT/FE-01A,02A,03A | 2 |
| 3 | CHM-MTR-EF-01 | 20/1 | M | 250 | | 450 | | 200 | C | 20/1 | (F) GAC-FIT/FE-04A,05A | 4 |
| 5 | LTS/RECPS EQUIP ENCL | 20/1 | R | 490 | | | 1126 | 636 | M | 20/1 | GAC-ACTU-01A | 6 |
| 7 | RECP PH ANALYZER | 20/1 | R | 180 | 816 | | | 636 | M | 20/1 | GAC-ACTU-02A | 8 |
| 9 | RECP PH ANALYZER | 20/1 | R | 180 | | 816 | | 636 | M | 20/1 | GAC-ACTU-03A | 10 |
| 11 | CHM-MTR-PMP-01 | 20/1 | M | 1176 | | | 1812 | 636 | M | 20/1 | GAC-ACTU-04A | 12 |
| 13 | CHM-MTR-PMP-02 | 20/1 | M | 1176 | 1812 | | | 636 | M | 20/1 | GAC-ACTU-05A | 14 |
| 15 | HEAT TRACE | 20/1 | N | 1000 | | 1636 | | 636 | M | 20/1 | GAC-ACTU-01B | 16 |
| 17 | RECPS WP/GFCI | 20/1 | R | 180 | | | 816 | 636 | M | 20/1 | GAC-ACTU-02B | 18 |
| 19 | GAC-FIT/FE-01B,02B,03B | 20/1 | C | 300 | 936 | | | 636 | M | 20/1 | GAC-ACTU-03B | 20 |
| 21 | (F) GAC-FIT/FE-04B,05B | 20/1 | C | 200 | | 836 | | 636 | M | 20/1 | GAC-ACTU-04B | 22 |
| 23 | | | | | | | 636 | 636 | M | 20/1 | GAC-ACTU-05B | 24 |
| 25 | | | | | 180 | | | 180 | R | 20/1 | RECPS WP/GFCI | 26 |
| 27 | | | | | | 0 | | | | | | 28 |
| 29 | | | | | | | 0 | | | | | 30 |
| | | | | | 4144 | 3738 | 4390 | | | | | |

| | |
|---|---|
| CONTINUOUS (C): | 1375 VA |
| NON-CONTINUOUS (N): | 1000 VA |
| RECEP. (R): | 1210 VA |
| MOTOR (M) OR (M1): | 8962 VA |
| LIGHTING (L): | 0 VA |
| KITCHEN >1750W (K): | 0 VA |

MCB: 125/3
MLO: –

MAX. PHASE @125% = 45.7 A.
DEMAND TOTAL = 12.5 kVA
= 34.8 A.
@125% = 43.5 A.

DEMAND CALC. PER ART 220

## PANELBOARD SCHEDULE

**PANEL:** LP2 — **LOCATION:** MCC2
**BUS RATING:** 125A — **PHASE:** 3 — **SCCR:** 22k — **NEMA TYPE:** 4X
**VOLTAGE:** 120/208 V. — **WIRE:** 4 — **BUSSING:** Cu — **MOUNTING:** SURFACE

| CKT | DESCRIPTION | BRKR | TYPE | LOAD | A (va) | B (va) | C (va) | LOAD | TYPE | BRKR | DESCRIPTION | CKT |
|---|---|---|---|---|---|---|---|---|---|---|---|---|
| 1 | BATTERY CHARGER | 20/1 | C | 600 | 700 | | | 100 | C | 20/1 | 40-FIT/FE-01 | 2 |
| 3 | RECP EG-1 | 20/1 | R | 180 | | 280 | | 100 | C | 20/1 | 40-FIT/FE-02 | 4 |
| 5 | EG-1 BLOCK HEATER | 30/2 | M | 1750 | | | 1850 | 100 | C | 20/1 | Z2-FIT-00 | 6 |
| 7 | " | / | M | 1750 | 1750 | | | | | 20/1 | | 8 |
| 9 | (E) CV-201 | 20/1 | M | 200 | | 200 | | | | 20/1 | | 10 |
| 11 | (E) CV-202 | 20/1 | M | 200 | | | 200 | | | 20/1 | | 12 |
| 13 | (E) Z2--FIT-01/02 | 20/1 | C | 200 | 200 | | | | | | | 14 |
| 15 | (E) C4-FIT-01 | 20/1 | C | 100 | | 100 | | | | | | 16 |
| 17 | (E) C4-ACT-01 | 20/1 | M | 696 | | | 696 | | | | | 18 |
| 19 | | | | | 0 | | | | | | | 20 |
| 21 | | | | | | 0 | | | | | | 22 |
| 23 | | | | | | | 0 | | | | | 24 |
| 25 | | | | | 0 | | | | | | | 26 |
| 27 | | | | | | 0 | | | | | | 28 |
| 29 | | | | | | | 0 | | | | | 30 |
| | | | | | 2650 | 580 | 2746 | | | | | |

| | |
|---|---|
| CONTINUOUS (C): | 1500 VA |
| NON-CONTINUOUS (N): | 0 VA |
| RECEP. (R): | 180 VA |
| MOTOR (M) OR (M1): | 4596 VA |
| LIGHTING (L): | 0 VA |
| KITCHEN >1750W (K): | 0 VA |

MCB: 100/3
MLO: –

MAX. PHASE @125% = 28.6 A.
DEMAND TOTAL = 6.3 kVA
= 17.4 A.
@125% = 21.8 A.

DEMAND CALC. PER ART 220

## PANELBOARD SCHEDULE

**PANEL:** LP3 — **LOCATION:** MCC3
**BUS RATING:** 125A — **PHASE:** 3 — **SCCR:** 22k — **NEMA TYPE:** 4X
**VOLTAGE:** 120/208 V. — **WIRE:** 4 — **BUSSING:** Cu — **MOUNTING:** SURFACE

| CKT | DESCRIPTION | BRKR | TYPE | LOAD | A (va) | B (va) | C (va) | LOAD | TYPE | BRKR | DESCRIPTION | CKT |
|---|---|---|---|---|---|---|---|---|---|---|---|---|
| 1 | (E) BSTR-FIT-01 | 20/1 | C | 100 | 200 | | | 100 | C | 20/1 | (E) BSTR-FIT-02 | 2 |
| 3 | (E) BSTR-ACTU-01 | 20/1 | C | 696 | | 696 | | | | | | 4 |
| 5 | (E) C2-FIT-01 | 20/1 | C | 100 | | | 100 | | | | | 6 |
| 7 | (E) C2-ACT-01 | 20/1 | M | 696 | 696 | | | | | | | 8 |
| 9 | | | | | | 0 | | | | | | 10 |
| 11 | | | | | | | 0 | | | | | 12 |
| 13 | | | | | 0 | | | | | | | 14 |
| 15 | | | | | | 0 | | | | | | 16 |
| 17 | | | | | | | 0 | | | | | 18 |
| 19 | | | | | 0 | | | | | | | 20 |
| 21 | | | | | | 0 | | | | | | 22 |
| 23 | | | | | | | 0 | | | | | 24 |
| 25 | | | | | 0 | | | | | | | 26 |
| 27 | | | | | | 0 | | | | | | 28 |
| 29 | | | | | | | 0 | | | | | 30 |
| | | | | | 896 | 696 | 100 | | | | | |

| | |
|---|---|
| CONTINUOUS (C): | 1245 VA |
| NON-CONTINUOUS (N): | 0 VA |
| RECEP. (R): | 0 VA |
| MOTOR (M) OR (M1): | 696 VA |
| LIGHTING (L): | 0 VA |
| KITCHEN >1750W (K): | 0 VA |

MCB: 100/3
MLO: –

MAX. PHASE @125% = 9.3 A.
DEMAND TOTAL = 1.9 kVA
= 5.4 A.
@125% = 6.7 A.

DEMAND CALC. PER ART 220

## PANELBOARD SCHEDULE

**PANEL:** LP4 — **LOCATION:** MCC4
**BUS RATING:** 125A — **PHASE:** 3 — **SCCR:** 22k — **NEMA TYPE:** 4X
**VOLTAGE:** 120/208 V. — **WIRE:** 4 — **BUSSING:** Cu — **MOUNTING:** SURFACE

| CKT | DESCRIPTION | BRKR | TYPE | LOAD | A (va) | B (va) | C (va) | LOAD | TYPE | BRKR | DESCRIPTION | CKT |
|---|---|---|---|---|---|---|---|---|---|---|---|---|
| 1 | (E) C3-FIT-01 | 20/1 | C | 100 | 100 | | | | | | | 2 |
| 3 | (E) C3-ACT-01 | 20/1 | M | 696 | | 696 | | | | | | 4 |
| 5 | RECP WP/GFCI | 20/1 | M | 180 | | | 180 | | | | | 6 |
| 7 | | | | | 0 | | | | | | | 8 |
| 9 | | | | | | 0 | | | | | | 10 |
| 11 | | | | | | | 0 | | | | | 12 |
| 13 | | | | | 0 | | | | | | | 14 |
| 15 | | | | | | 0 | | | | | | 16 |
| 17 | | | | | | | 0 | | | | | 18 |
| 19 | | | | | 0 | | | | | | | 20 |
| 21 | | | | | | 0 | | | | | | 22 |
| 23 | | | | | | | 0 | | | | | 24 |
| 25 | | | | | 0 | | | | | | | 26 |
| 27 | | | | | | 0 | | | | | | 28 |
| 29 | | | | | | | 0 | | | | | 30 |
| | | | | | 100 | 696 | 180 | | | | | |

| | |
|---|---|
| CONTINUOUS (C): | 125 VA |
| NON-CONTINUOUS (N): | 0 VA |
| RECEP. (R): | 0 VA |
| MOTOR (M) OR (M1): | 876 VA |
| LIGHTING (L): | 0 VA |
| KITCHEN >1750W (K): | 0 VA |

MCB: 100/3
MLO: –

MAX. PHASE @125% = 7.3 A.
DEMAND TOTAL = 1.0 kVA
= 2.8 A.
@125% = 3.5 A.

DEMAND CALC. PER ART 220

Know what's below. Call before you dig.

WARNING
POWER LINES OVERHEAD

COPYRIGHT 2021 by PROVOST & PRITCHARD ENGINEERING GROUP, INC. ALL RIGHTS RESERVED
The firm of Provost & Pritchard Engineering Group, Inc. expressly reserves its common law copyright and other applicable property rights in these plans. These plans are not to be reproduced, changed, or copied in any form or manner whatsoever, nor are they to be assigned to a third party without first obtaining the expressed written permission and consent of Pritchard Engineering Group, Inc. In the event of unauthorized reuse of these plans by a third party, the third party agrees to hold harmless Provost & Pritchard Engineering Group, Inc. and its officers, employees, and consultants from any liability which may result from such reuse. The third party agrees to pay all costs that Provost & Pritchard Engineering Group, Inc. may incur in connection with defending and enforcing these rights.

BID ISSUE
10-12-2021

| No. | REVISION | BY | DATE |
|---|---|---|---|

REGISTERED PROFESSIONAL ENGINEER
KEVIN L. PEZZONI
NO. 16269
ELECTRICAL
STATE OF CALIFORNIA

1,2,3-TCP REMOVAL PROJECT FOR
CONEJO WELLS
CAMROSA WATER DISTRICT
CAMARILLO, CA

ELECTRICAL
PANEL SCHEDULES

PROVOST & PRITCHARD CONSULTING GROUP
EST 1968
An Employee Owned Company
286 W. CROMWELL AVE.
FRESNO, CALIFORNIA 93711-6162
559/449-2700 FAX 559/449-2715
www.ppeng.com

DESIGN ENGINEER: KLP
LICENSE NO: 16269
DRAFTED BY: FR
CHECKED BY: KLP
DATE: 5-03-2021
JOB NO: 21-598

PHASE: –
0 1"
ORIGINAL SCALE SHOWN IS ONE INCH. ADJUST SCALE FOR REDUCED OR ENLARGED PLANS.

SHEET E3.2
52 OF 54

PEZZONI ENGINEERING, INC.
CONSULTING ELECTRICAL ENGINEERS
1150 9TH Street Suite #1415 Modesto, CA 95354
PHONE: 209 . 554 . 4602
HTTP://WWW.PEZZNGR.COM

PEZZONI ENGINEERING, INC. © Copyrighted 2020

10/12/21 9:13:42 AM F:\21\598 CAMROSA WATER DISTRICT GAC\ENGR\SHEETS\E3.1 SCHEDULES.DWG frangel

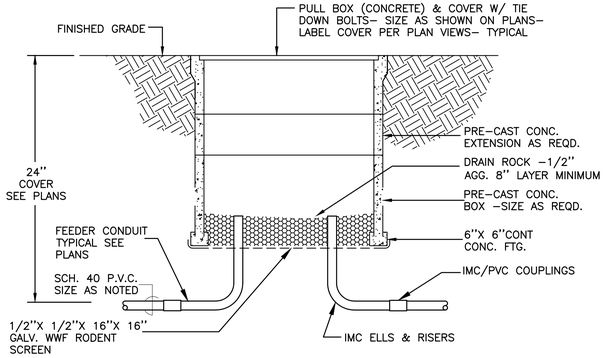


NOTES:
1. TRAFFIC RATED CHRISTY "B" SERIES OR EQUAL MINIMUM BOX SIZE PER PLANS.
2. ADD EXTENSIONS WHERE NECESSARY TO RAISE COVER TO FINISHED GRADE.
3. GROUND COVER FRAME, COVER AND OTHER EXPOSED METAL PARTS TO #8 BARE COPPER GROUND CABLE

## 3 PULL BOX DETAIL
SCALE: N.T.S.

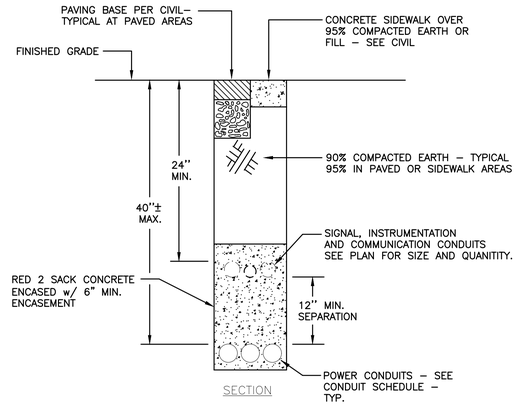


NOTES:
1. PLACE CONDUIT RUNS OF 4 CONDUITS OR GREATER IN PLASTIC SPACERS (RATED FOR DIRECT BURIAL) EVERY 5' ALONG LENGTH OF RUN.
2. PROVIDE 1¼" OR 2X TRADE DIAMETER OF CONDUIT, WHICHEVER IS GREATER, BETWEEN BUNDLED CONDUITS.

## 2 ENCASED CONDUIT DETAIL
SCALE: N.T.S.

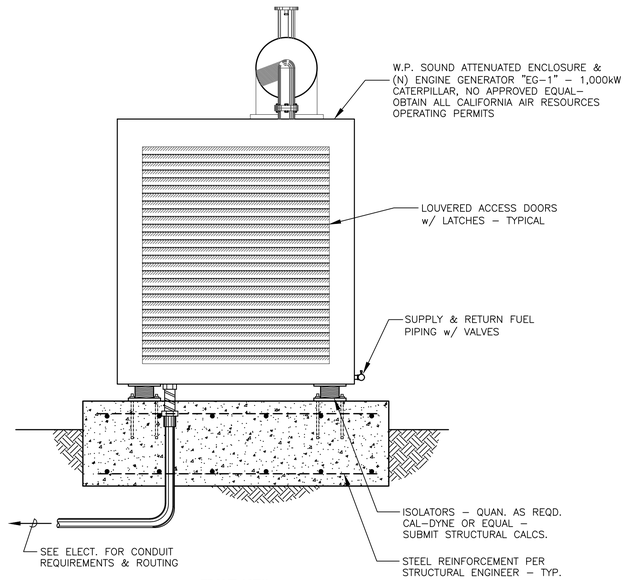


*FRONT VIEW*

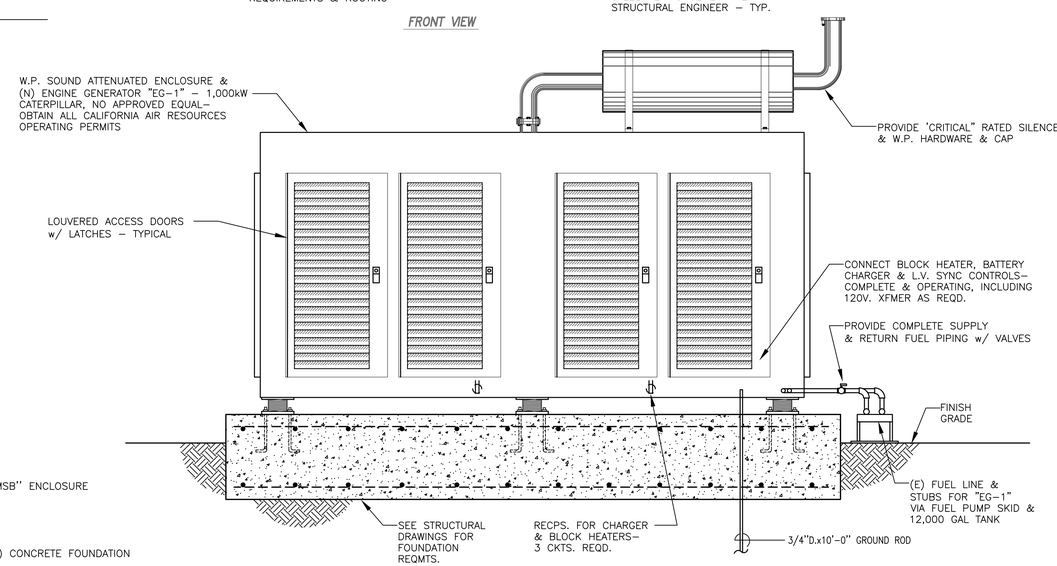


*SIDE VIEW*

## 1 NEW EMERGENCY GENERATOR SET AND FOUNDATION – "EG–DWP"
SCALE: N.T.S.

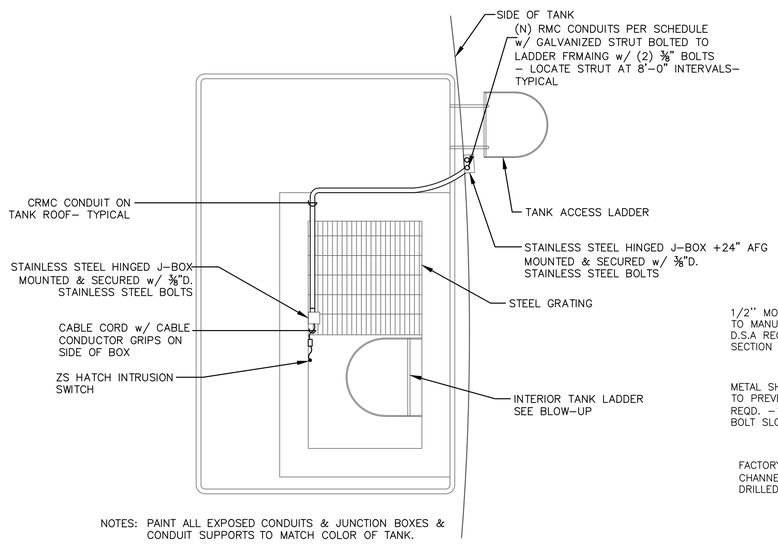


NOTES: PAINT ALL EXPOSED CONDUITS & JUNCTION BOXES & CONDUIT SUPPORTS TO MATCH COLOR OF TANK.

## 5 INTRUSION ALARM CONNECTION AT TANK
SCALE: NONE

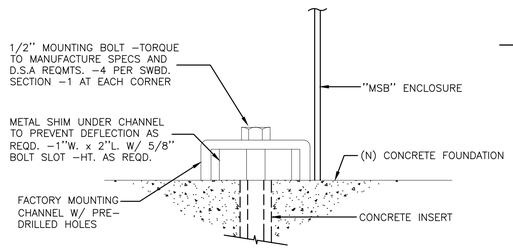


## 4 SWITCHBOARD ANCHORAGE
SCALE: N.T.S.

811 Know what's below. Call before you dig.

WARNING POWER LINES OVERHEAD

COPYRIGHT 2021 by PROVOST & PRITCHARD ENGINEERING GROUP, INC. ALL RIGHTS RESERVED. The firm of Provost & Pritchard Engineering Group, Inc. expressly reserves its common law copyright and other applicable property rights in these plans. These plans are not to be reproduced, changed, or copied in any form or manner whatsoever, nor are they to be assigned to a third party without first obtaining the written permission and consent of Provost & Pritchard Engineering Group, Inc. In the event of unauthorized reuse of these plans by a third party, the third party agrees to hold Provost & Pritchard Engineering Group, Inc. harmless, and shall indemnify Provost & Pritchard Engineering Group, Inc. for any and all loss, liability or fees associated with defending and enforcing these rights.

| No. | REVISION | BY | DATE |
|---|---|---|---|
| | BID ISSUE 10-12-2021 | | |

REGISTERED PROFESSIONAL ENGINEER KEVIN L. PEZZONI NO. 16269 CIVIL STATE OF CALIFORNIA

1,2,3–TCP REMOVAL PROJECT FOR CONEJO WELLS
CAMROSA WATER DISTRICT
CAMARILLO, CA

ELECTRICAL
ELECTRICAL DETAILS

PROVOST & PRITCHARD CONSULTING GROUP
EST 1968
An Employee Owned Company
286 WEST CROMWELL AVENUE
FRESNO, CALIFORNIA 93711-6162
559/449-2700 FAX 559/449-2715
www.ppeng.com

DESIGN ENGINEER: KLP
LICENSE NO: 16269
DRAFTED BY: FR
CHECKED BY: KLP
DATE: 5–03–2021
JOB NO: 21–598
PHASE: –
0 1"
ORIGINAL SCALE SHOWN IS ONE INCH. ADJUST SCALE FOR REDUCED OR ENLARGED PLANS.
SHEET E4.0
53 OF 54

PEZZONI ENGINEERING, INC.
CONSULTING ELECTRICAL ENGINEERS
1150 9TH Street Suite #1415 Modesto, CA 95354
PHONE: 209 . 554 . 4602
HTTP://WWW.PEZENGR.COM

PEZZONI ENGINEERING, INC. © Copyrighted 2020

10/12/21 9:13:45 AM F:\21\598 CAMROSA WATER DISTRICT GAC\ENGR\SHEETS\E4.0 ELECT DETAILS.DWG frongel

811 Know what's below. Call before you dig.

WARNING
POWER LINES OVERHEAD

NOTE:
1. ADDED HEADROOM IS ACHIEVED BY 6" GRADE RINGS (EXTENSIONS).
2. DEEP RECESS ALLOWS 7'-0" SPLICING LENGTH

REINFORCEMENT:
TRAFFIC USE-H-20 BRIDGE LOADING
PARKWAY USE-NONE REQUIRED

INSTALLATION:
PULL BOX TO BE PLACED ON 6" OF COMPACTED ROCK OR SAND BASE TO INSURE UNIFORM DISTRIBUTION OF SOIL PRESSURE ON FLOOR

SPECIFICATIONS:
CONCRETE TO BE CLASS "A" (3,000 P.S.I.) TYPE. STEEL PRECISION BUILT FORMS ARE USED TO ASSURE TRUE AND CONSTANT ALIGNMENT. 1" CHAMFER ON ALL INSIDE CORNERS.

EXCAVATION SIZE:
52" MIN. X 97 MIN. X DEPTH TO SUIT JOB

WEIGHT:
BOX ONLY = 3480 LBS.

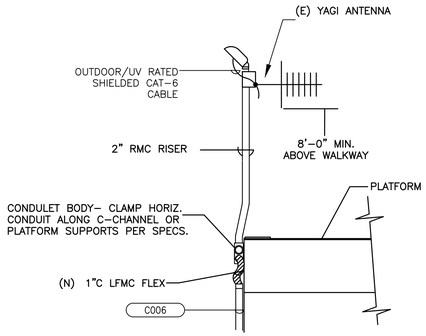


2 ANTENNA MOUNTING AT TANK
SCALE: N.T.S.

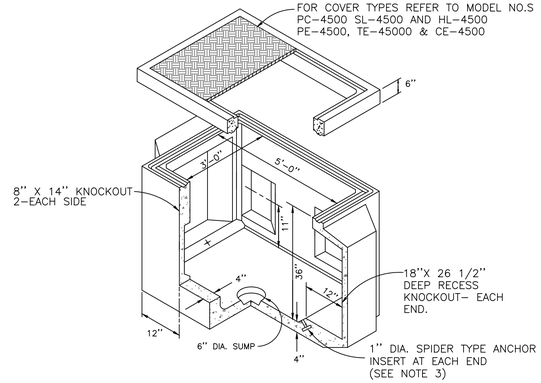


1 3' X 5' CONCRETE VAULT
SCALE: N.T.S.

COPYRIGHT 2021 by PROVOST & PRITCHARD ENGINEERING GROUP, INC. ALL RIGHTS RESERVED
The firm of Provost & Pritchard Engineering Group, Inc. expressly reserves its common law copyright and other applicable property rights in these plans. These plans are not to be reproduced, changed, or copied in any form or manner whatsoever, nor are they to be assigned to a third party without first obtaining the written permission and consent of Provost & Pritchard Engineering Group, Inc. In the event of unauthorized reuse of these plans by a third party, the third party shall hold the firm of Provost & Pritchard Engineering Group, Inc. harmless, and shall bear the cost of Provost & Pritchard Engineering Group, Inc. is legal fees associated with defending and enforcing these rights.

| No. | REVISION | BY | DATE |
|---|---|---|---|
| | BID ISSUE 10-12-2021 | | |

REGISTERED PROFESSIONAL ENGINEER
KEVIN L. PEZZONI
NO. 16269
ELECTRICAL
STATE OF CALIFORNIA

1,2,3-TCP REMOVAL PROJECT FOR
CONEJO WELLS
CAMROSA WATER DISTRICT
CAMARILLO, CA

ELECTRICAL
ELECTRICAL DETAILS

EST. 1968
PROVOST & PRITCHARD
CONSULTING GROUP
An Employee Owned Company
286 WEST CROMWELL AVENUE
FRESNO, CALIFORNIA 93711-6162
559/449-2700 FAX 559/449-2715
www.ppeng.com

DESIGN ENGINEER: KLP
LICENSE NO: 16269

| DRAFTED BY: FR | CHECKED BY: KLP |
|---|---|
| DATE: 5-03-2021 | |
| JOB NO: 21-598 | |
| PHASE: - | |

0 1"
ORIGINAL SCALE SHOWN IS ONE INCH. ADJUST SCALE FOR REDUCED OR ENLARGED PLANS.

SHEET E4.1

54 OF 54

PEZZONI ENGINEERING, INC.
CONSULTING ELECTRICAL ENGINEERS
1150 9TH Street Suite #1415 Modesto, CA 95354
PHONE: 209 . 554 . 4602
HTTP://WWW.PEZENGR.COM

PEZZONI ENGINEERING, INC. © Copyrighted 2020

10/12/21 9:13:46 AM F:\21\598 CAMROSA WATER DISTRICT GAC\ENGR\SHEETS\E4.0 ELECT DETAILS.DWG frangel